SHEET INDEX

1. TITLE SHEET
2. CORE LOCATIONS, ABBREVIATIONS & LEGEND
3. ROADWAY SECTIONS
4. ROADWAY SECTIONS
5. ROADWAY SECTIONS
6. CONSTRUCTION DETAILS
7. CONSTRUCTION DETAILS
8. NOTES
9. STORM DRAIN PLAN
10. FENCE PLAN
11. FIRST STREET
12. FIRST STREET
13. SECOND STREET
14. THIRD STREET
15. THIRD STREET
16. FOURTH STREET
17. D STREET
18. YOSEMITE DRIVE
19. PAOHA DRIVE
20. PAOHA DRIVE
21. MONO LAKE AVENUE
22. MONO LAKE AVENUE
23. LEE VINING AVENUE
24. LEE VINING AVENUE
25. LEE VINING AVENUE
26. LEE VINING AVENUE
27. LEE VINING AVENUE
28. MATTLY AVENUE
29. MATTLY AVENUE
30. MATTLY AVENUE
31. MATTLY AVENUE
32. MATTLY AVENUE
33. MATTLY AVENUE
34. CALTRANS STANDARD DETAILS

COUNTY OF MONO

DEPARTMENT OF PUBLIC WORKS

PROJECT PLANS FOR CONSTRUCTION ON

LEE VINING STREETS REHABILITATION

LEE VINING, MONO COUNTY, CALIFORNIA

LENGTH = 1.68 MILES

TO BE SUPPLEMENTED BY
CALTRANS STANDARD PLANS DATED 2010

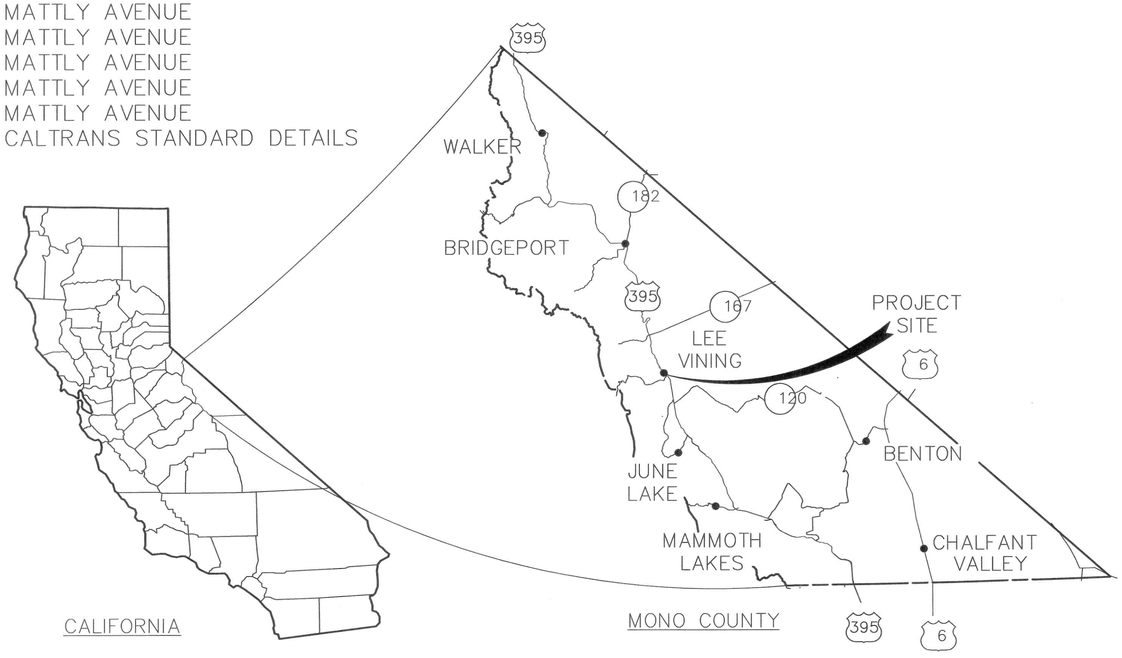

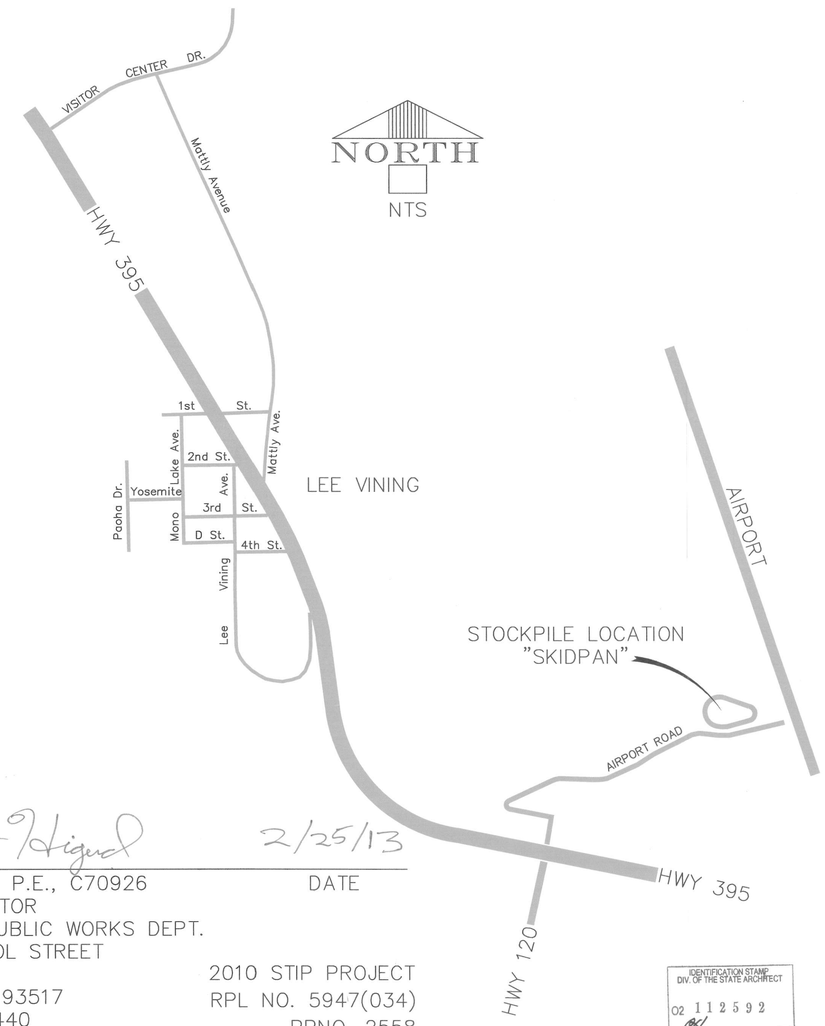

Garrett Higerd 2/25/13

GARRETT HIGERD, P.E., C70926 DATE
ASSISTANT DIRECTOR
MONO COUNTY PUBLIC WORKS DEPT.
74 NORTH SCHOOL STREET
P.O. BOX 457
BRIDGEPORT, CA 93517
PH: 760-932-5440
FAX: 760-932-5441
monopw@mono.ca.gov

2010 STIP PROJECT
RPL NO. 5947(034)
PPNO. 2558

IDENTIFICATION STAMP
DIV. OF THE STATE ARCHITECT
02 112592
AC FLS SG
DATE 10/22/12

triad/holmes assoc.
civil engineering
land surveying
MAMMOTH LAKES
BISHOP
REDWOOD CITY
SAN LUIS OBISPO

post office box 1570
548 old mammoth rd., ste. 202
MAMMOTH LAKES, ca 93546
phone (760) 934-7588
fax (760) 934-5619
e-mail triad@thalnc.com

873 north main st. suite 150
BISHOP, ca 93514
phone (760) 873-4273
fax (760) 873-8024
e-mail bishop@thalnc.com

777 woodside rd. suite a
REDWOOD CITY, ca 94061
phone (650) 366-0216
fax (650) 366-0298
e-mail sf@thalnc.com

555 chorro st. suite a
SAN LUIS OBISPO, ca 93405
phone (805) 544-8906
fax (805) 544-8932
e-mail slo@thalnc.com

Copyright (C) 2012 by Triad/Holmes Associates.

All Rights Reserved. This Document is Intended Only for Use on the Project Specified. Any Re-Use or Re-Stack Keep/Reproduction of this Document or Portions of this Document, Without the Expressed Written Consent of Triad/Holmes is Prohibited.

PREPARED & SUBMITTED BY:

REGISTERED PROFESSIONAL ENGINEER
MATTHEW S. SCHOBER
NO. C 70489
EXP. 9/30/14
CIVIL
STATE OF CALIFORNIA

DATE: 09/06/2012

LEE VINING
STREETS REHABILITATION PROJECT
TITLE SHEET

DATE	09/06/2012
SCALE	AS SHOWN
DRAWN	MS/SF/JSP
JOB NO.	01.2951.2
SHEET	1 OF 34 SHEETS

K:\01 Mammoth\2951.2\ACAD\Improvement Plans\2951.2_Title-Index-Notes.dwg Sep 27,2012 - 10:31am sfuller

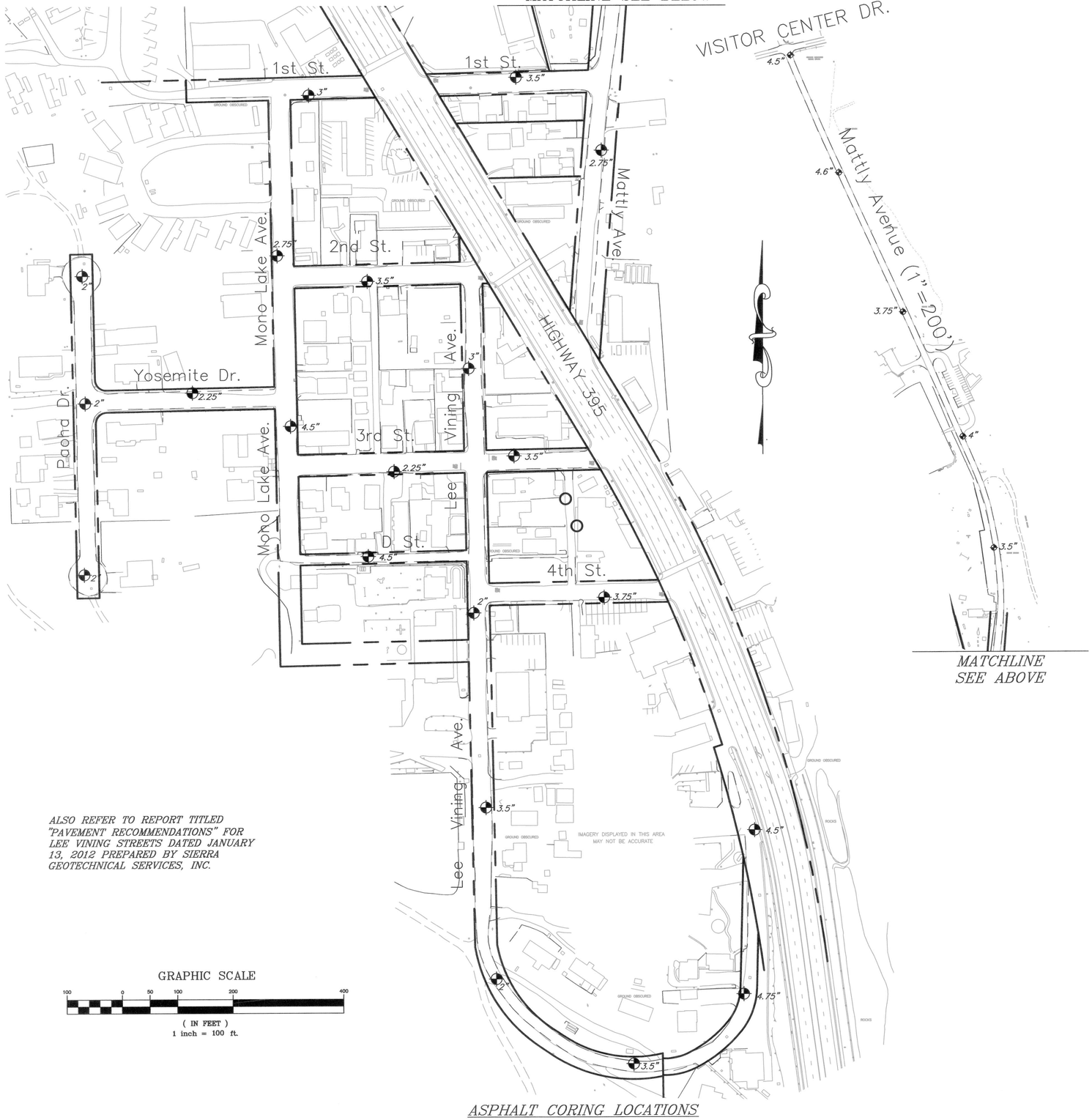

ASPHALT CORING LOCATIONS

ALSO REFER TO REPORT TITLED "PAVEMENT RECOMMENDATIONS" FOR LEE VINING STREETS DATED JANUARY 13, 2012 PREPARED BY SIERRA GEOTECHNICAL SERVICES, INC.

GRAPHIC SCALE

100 0 50 100 200 400

(IN FEET)
1 inch = 100 ft.

CALTRANS STANDARD PLANS DATED 2010

A10A	ABBREVIATIONS
A10B	ABBREVIATIONS
A20A	PAVEMENT MARKERS AND TRAFFIC LINES, TYPICAL DETAILS
A20B	PAVEMENT MARKERS AND TRAFFIC LINES, TYPICAL DETAILS
A24D	PAVEMENT MARKINGS – WORDS
A73A	MARKERS
A73B	MARKERS
A87A	CURBS AND DRIVEWAYS
A87B	HOT MIX ASPHALT DIKES
A88A	CURB RAMP DETAILS
RS1	ROADSIDE SIGNS TYPICAL INSTALLATION DETAILS NO. 1
RS2	ROADSIDE SIGNS WOOD POST TYPICAL INSTALLATION DETAILS NO. 2
RS4	ROADSIDE SIGNS TYPICAL INSTALLATION DETAILS NO. 4

ABBREVIATIONS

(IN ADDITION TO STANDARD PLANS A10A AND A10B)

AP	ANGLE POINT
APP.	APPROACH
BW	BACK OF WALK
CMP	CORRUGATED METAL PIPE
DW	DRIVEWAY
EG	EXISTING GRADE
EX	EXISTING
FL	FLOW LINE
HP	HIGH POINT
INST.	INSTALL
LP	LOW POINT
M.D.D.	MAXIMUM DRY DENSITY
MFR.	MANUFACTURER
N.T.S.	NOT TO SCALE
PERF.	PERFORATED
PULV.	PULVERIZE
R	RADIUS, RIGHT
R&R	REMOVE & REPLACE
REM	REMOVE
SS	SANITARY SEWER
SSMH	SANITARY SEWER MANHOLE
U.N.A.	UNLESS NOTED OTHERWISE
W	WATER
WV	WATER VALVE

LEGEND

— — —	RIGHT OF WAY
7025	EXISTING CONTOURS
— — —	CENTERLINE
— — —	EXISTING EDGE OF PAVEMENT
—o—o—o—	EXISTING CHAIN LINK FENCE
—···—···—	EXISTNG FLOW LINE
⊙	SURVEY MONUMENT WELL
	EXISTING FIRE HYDRANT
WV	EXISTING WATER VALVE
	EXISTING POWER POLE
	EXISTING GUY ANCHOR
	EXISTING STORM DRAIN DROP INLET
Ⓢ	EXISTING SEWER MANHOLE
3.5"	ASPHALT CORE LOCATION AND THICKNESS

PROPOSED FEATURES

	LIMITS OF PAVING
	HMA DRIVEWAY TRANSITION
	CONCRETE CROSS GUTTER

IDENTIFICATION STAMP
DIV. OF THE STATE ARCHITECT
02 112592
ACCESSIBILITY FLS.
DATE 10/22/12

triad/holmes assoc.
civil engineering
land surveying
MAMMOTH LAKES
BISHOP
REDWOOD CITY
SAN LUIS OBISPO

post office box 1570
549 old mammoth rd., ste. 202
MAMMOTH LAKES, ca 93546
phone (760) 934-7588
fax (760) 934-5619
e-mail triad@thdinc.com

873 north main st. suite 150
BISHOP, ca 93514
phone (760) 873-4273
fax (760) 873-8024
e-mail bishop@thdinc.com

777 woodside rd. suite a
REDWOOD CITY, ca 94061
phone (650) 366-0216
fax (650) 366-0298
e-mail sf@thdinc.com

555 chorro st. suite a
SAN LUIS OBISPO, ca 93405
phone (805) 544-8908
fax (805) 544-8932
e-mail slo@thdinc.com

Copyright (C) 2012 by Triad/Holmes Associates.

All Rights Reserved. This Document is Intended Only for Use on the Project Specified in the Title Block. Any Reproduction of this Document or Portions of this Document, Without the Expressed Written Consent of Triad/Holmes is Prohibited.

PREPARED & SUBMITTED BY:

REGISTERED PROFESSIONAL ENGINEER
MATTHEW S. SCHOEDER
NO. C 70489
EXP. 9/30/14
CIVIL
STATE OF CALIFORNIA

DATE: 09/06/2012

LEE VINING STREETS REHABILITATION PROJECT

CORE LOCATIONS, ABBREVIATIONS & LEGEND

DATE	09/06/2012
SCALE	AS SHOWN
DRAWN	MS/SF/JSP
JOB NO.	01.2951.2
SHEET	2 OF 34 SHEETS

K:\01 Mammoth\2951.2\CAD\Improvement Plans\2951.2 _Title-Index-Notes.dwg Sep 27,2012 - 10:33am, sfuller

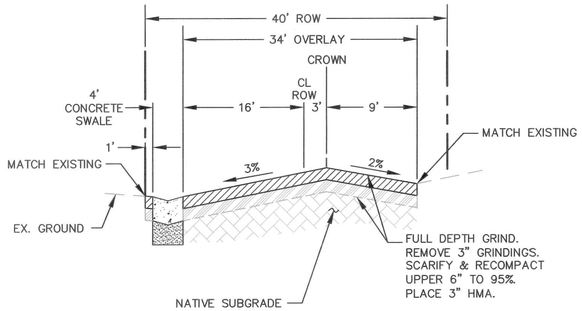

ROADWAY SECTION – WEST FIRST STREET
GRIND, REMOVE AND OVERLAY
STA 1+30 TO 2+41

N.T.S.

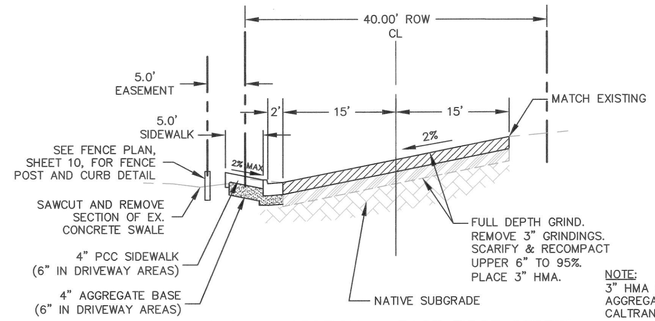

NOTE:
3" HMA ON 4" CLASS 2 AGGREGATE BASE IN CALTRANS ROW

ROADWAY SECTION – EAST FIRST STREET
GRIND, REMOVE AND OVERLAY
STA 4+00 TO 6+00

N.T.S.

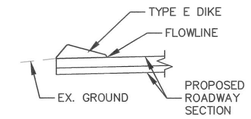

DIKE DETAIL

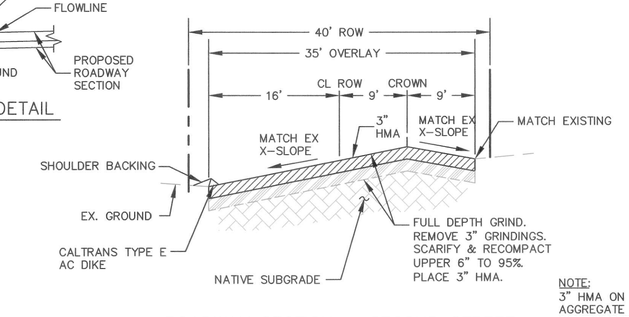

NOTE:
3" HMA ON 4" CLASS 2 AGGREGATE BASE IN CALTRANS ROW

ROADWAY SECTION – SECOND STREET
GRIND AND OVERLAY
STA 1+28 TO 4+50

N.T.S.

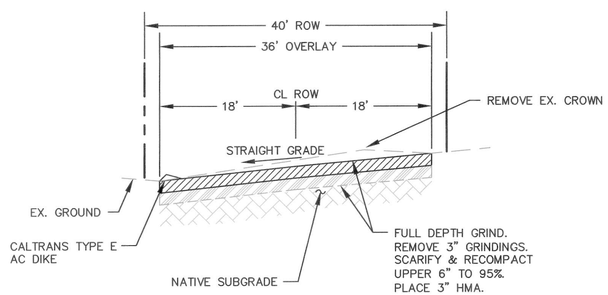

ROADWAY SECTION – THIRD STREET
GRIND, REMOVE AND OVERLAY
STA 1+23 TO 4+20

N.T.S.

NOTE: SEE CORE INFORMATION ON SHEET 2 FOR EXISTING ASPHALT DEPTHS

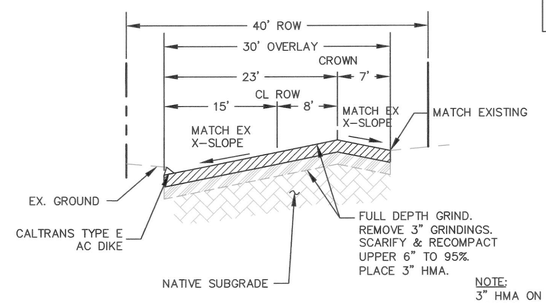

NOTE:
3" HMA ON 4" CLASS 2 AGGREGATE BASE IN CALTRANS ROW

ROADWAY SECTION – THIRD STREET
GRIND, REMOVE AND OVERLAY
STA 4+65 TO 6+36

N.T.S.

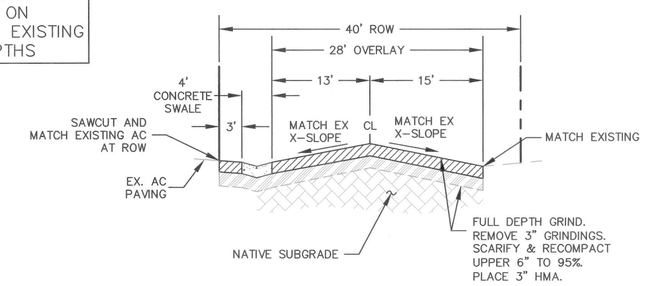

ROADWAY SECTION – FOURTH STREET
GRIND, REMOVE AND OVERLAY
STA 1+26 TO 2+78

N.T.S.

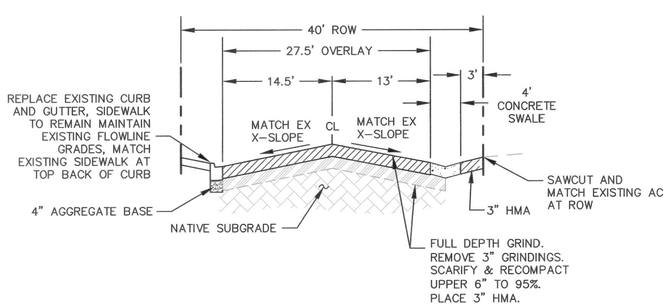

NOTE:
3" HMA ON 4" CLASS 2 AGGREGATE BASE IN CALTRANS ROW

ROADWAY SECTION – FOURTH STREET
GRIND, REMOVE AND OVERLAY
STA 2+78 TO 4+20

N.T.S.

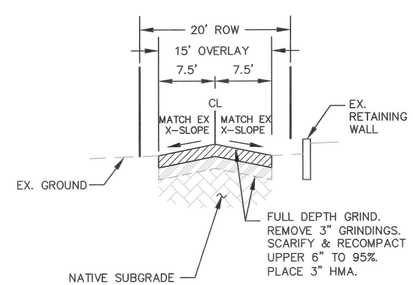

ROADWAY SECTION – D STREET
GRIND, REMOVE AND OVERLAY
STA 1+33 TO 4+00

N.T.S.

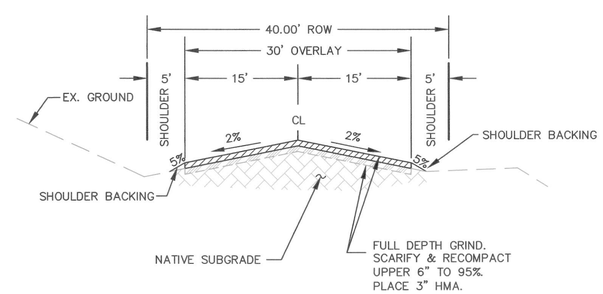

ROADWAY SECTION
YOSEMITE DR. AND PAOHA DR.
GRIND AND OVERLAY
YOSEMITE STA 1+40 TO 4+18
PAOHA STA 1+95 TO 6+25

N.T.S.

IDENTIFICATION STAMP
DIV. OF THE STATE ARCHITECT
02 112592
AC FLS SB
DATE 10/22/12

triad/holmes assoc.
civil engineering
land surveying

MAMMOTH LAKES
BISHOP
REDWOOD CITY
SAN LUIS OBISPO

post office box 1570
549 old mammoth rd., ste. 202
MAMMOTH LAKES, ca 93546
phone (760) 934-7588
fax (760) 934-5619
e-mail triad@thalno.com

873 north main st. suite 150
BISHOP, ca 93514
phone (760) 873-4273
fax (760) 873-8024
e-mail bishop@thalno.com

777 woodside rd. suite a
REDWOOD CITY, ca 94061
phone (650) 366-0216
fax (650) 366-0298
e-mail sb@thalno.com

555 chorro st. suite a
SAN LUIS OBISPO, ca 93405
phone (805) 544-8906
fax (805) 544-8932
e-mail slo@thalno.com

Copyright (C) 2012 by Triad/Holmes Associates.

All Rights Reserved. This Document is Intended Only for the Use of the Entity Specified in the Title Block. Any Reproduction of this Document or Portions of this Document, Without the Expressed Written Consent of Triad/Holmes is Prohibited.

PREPARED & SUBMITTED BY:

REGISTERED PROFESSIONAL ENGINEER
MATTHEW S. SCHOBER
NO. C 70489
EXP. 9/30/14
CIVIL
STATE OF CALIFORNIA

DATE: 09/06/2012

LEE VINING
STREETS REHABILITATION PROJECT
SECTIONS

DATE	09/06/2012
SCALE	AS SHOWN
DRAWN	MS/SF/JSP
JOB NO.	01.2951.2
SHEET	3 OF 34 SHEETS

K:\01 Mammoth\2951.2\ACAD\Improvement Plans\2951.2 _Title-Index-Notes.dwg Sep 27,2012 - 10:35am, sfuller

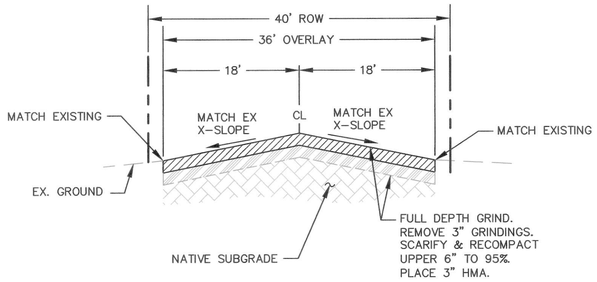

ROADWAY SECTION – MONO LAKE AVENUE
GRIND, REMOVE AND OVERLAY
STA 1+22 TO 9+20

N.T.S.

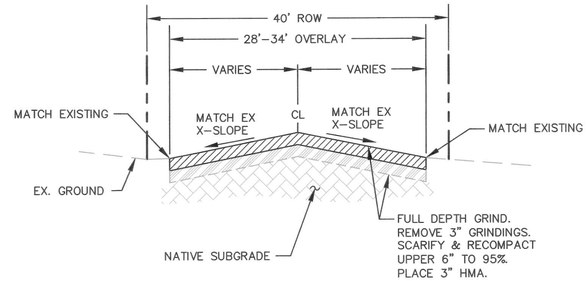

ROADWAY SECTION – LEE VINING AVENUE
GRIND, REMOVE AND OVERLAY
STA 100+00 TO 111+05

N.T.S.

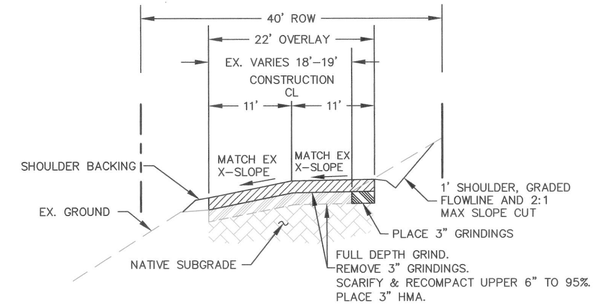

ROADWAY SECTION – LEE VINING AVENUE
GRIND, WIDEN AND OVERLAY
STA 200+54 TO 204+86

N.T.S.

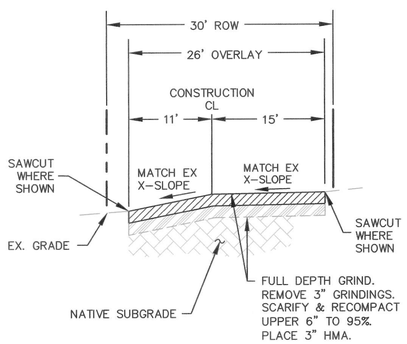

ROADWAY SECTION – LEE VINING AVENUE
GRIND, REMOVE AND OVERLAY
STA 205+14 TO 206+56

N.T.S.

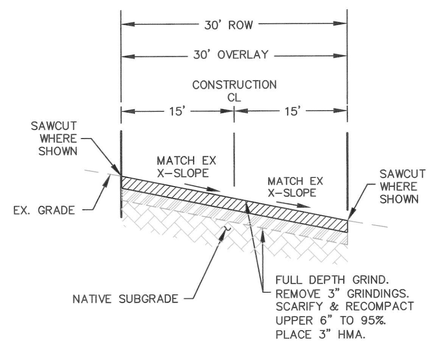

ROADWAY SECTION – LEE VINING AVENUE
GRIND, REMOVE AND OVERLAY
STA 206+88 TO 207+96

N.T.S.

NOTE: SEE CORE INFORMATION ON SHEET 2 FOR EXISTING ASPHALT DEPTHS

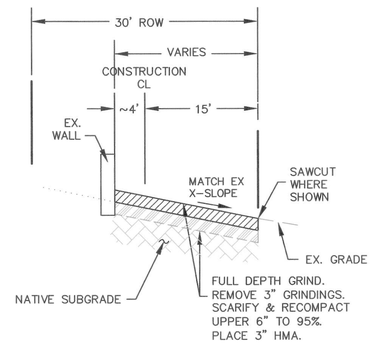

ROADWAY SECTION – LEE VINING AVENUE
GRIND, REMOVE AND OVERLAY
STA 207+96 TO 208+32

N.T.S.

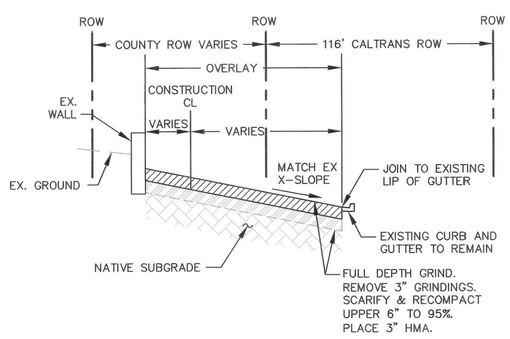

ROADWAY SECTION – LEE VINING AVENUE
GRIND, REMOVE AND OVERLAY
STA 208+32 TO 209+05

N.T.S.

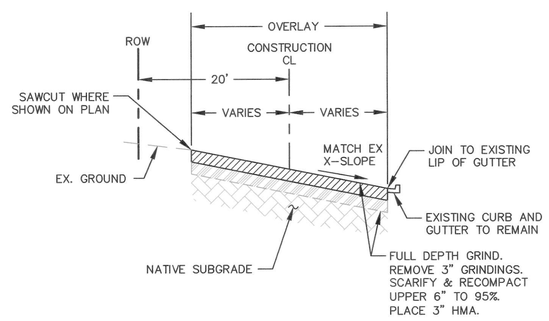

ROADWAY SECTION – LEE VINING AVENUE
GRIND, REMOVE AND OVERLAY
STA 400+00 TO 402+75

N.T.S.

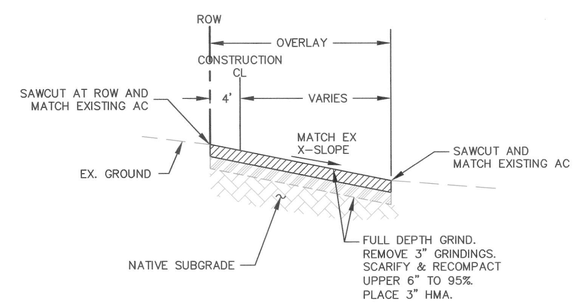

ROADWAY SECTION – LEE VINING AVENUE
GRIND, REMOVE AND OVERLAY
STA 402+75 TO 403+41

N.T.S.

IDENTIFICATION STAMP
DIV. OF THE STATE ARCHITECT
02 112592
AC PLS SG
DATE 10/22/12

triad/holmes assoc.
civil engineering
land surveying

MAMMOTH LAKES
BISHOP
REDWOOD CITY
SAN LUIS OBISPO

post office box 1570
549 old mammoth rd., ste. 202
MAMMOTH LAKES, ca 93546
phone (760) 934-7588
fax (760) 934-5619
e-mail triad@thainc.com

873 north main st. suite 150
BISHOP, ca 93514
phone (760) 873-4273
fax (760) 873-8024
e-mail bishop@thainc.com

777 woodside rd. suite a
REDWOOD CITY, ca 94061
phone (650) 366-0218
fax (650) 366-0298
e-mail sf@thainc.com

555 chorro st. suite a
SAN LUIS OBISPO, ca 93405
phone (805) 544-8908
fax (805) 544-8932
e-mail slo@thainc.com

Copyright (C) 2012 by Triad/Holmes Associates.

All Rights Reserved. This Document is Intended Only for Use on the Project Specified in the Title Block. Reproduction of this Document, or Portions of this Document, Without the Expressed Written Consent of Triad/Holmes is Prohibited.

PREPARED & SUBMITTED BY:

REGISTERED PROFESSIONAL ENGINEER
MATTHEW S. SCHOBER
NO. C 70489
EXP. 9/30/14
CIVIL
STATE OF CALIFORNIA

DATE: 09/06/2012

LEE VINING STREETS REHABILITATION PROJECT

SECTIONS

DATE	09/06/2012
SCALE	AS SHOWN
DRAWN	MS/SF/JSP
JOB NO.	01.2951.2
SHEET	4 OF 34 SHEETS

K:\01 Mammoth\2951.2\4CAD\Improvement Plans\2951.2 _Title-Index-Notes.dwg Sep 27,2012 - 10:57am, sfuller

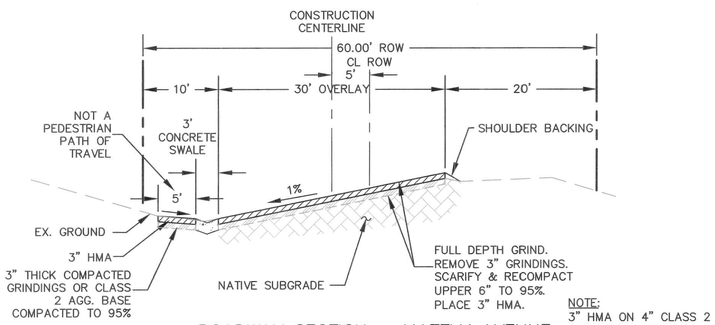

NOTE; 3" HMA ON 4" CLASS 2 AGGREGATE BASE IN CALTRANS ROW

ROADWAY SECTION – MATTLY AVENUE
GRIND, REMOVE AND OVERLAY
STA 1+40 TO 1+80

N.T.S.

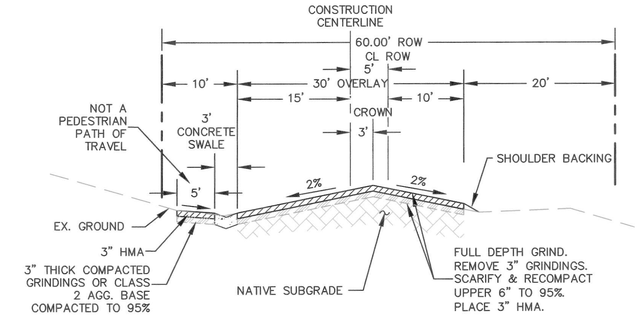

ROADWAY SECTION – MATTLY AVENUE
GRIND, REMOVE AND OVERLAY
STA 2+00 TO 5+20

N.T.S.

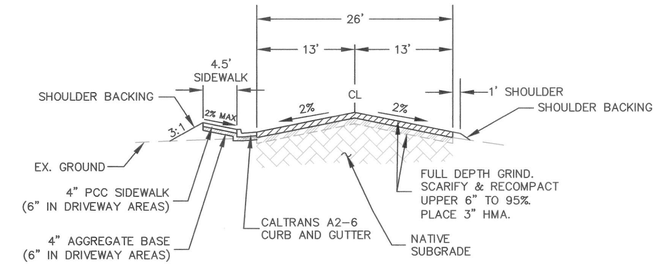

ROADWAY SECTION – MATTLY AVENUE
GRIND AND OVERLAY
STA 6+00 TO 7+00

N.T.S.

NOTE: SEE CORE INFORMATION ON SHEET 2 FOR EXISTING ASPHALT DEPTHS

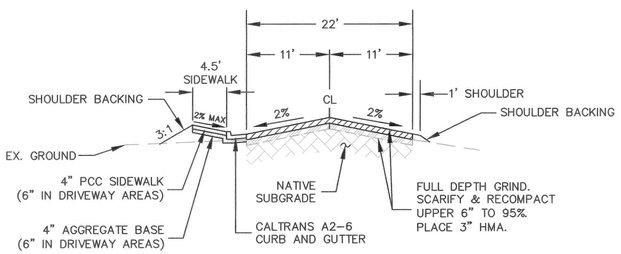

ROADWAY SECTION – MATTLY AVENUE
GRIND AND OVERLAY
STA 7+00 TO 8+08
STA 10+68 TO 12+35

N.T.S.

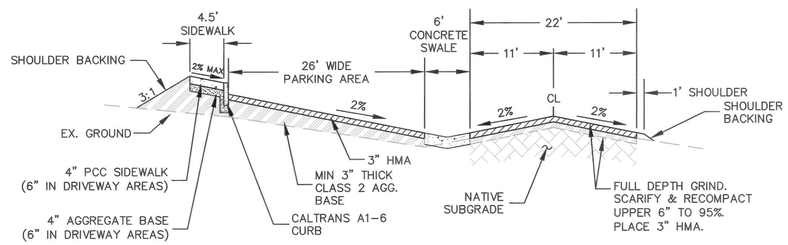

ROADWAY SECTION – MATTLY AVENUE
GRIND AND OVERLAY
WITH PARKING SECTION
STA 8+32 TO 10+45

N.T.S.

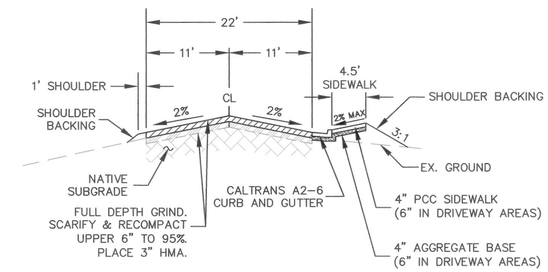

ROADWAY SECTION – MATTLY AVENUE
GRIND AND OVERLAY
STA 12+35 TO 17+53

N.T.S.

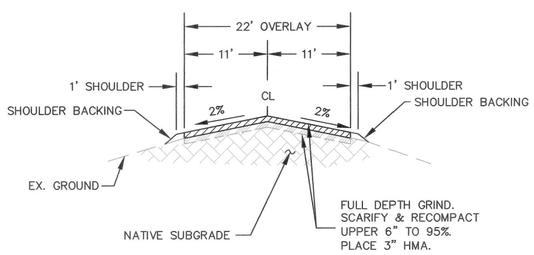

ROADWAY SECTION – MATTLY AVENUE
GRIND AND OVERLAY
STA 17+53 TO 29+10

N.T.S.

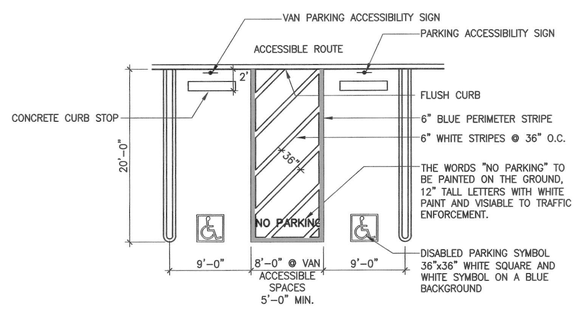

NOTE: SURFACE SLOPE OF STALL SHALL NOT EXCEED 2% IN ANY DIRECTION.

ACCESSIBLE STANDARD PARKING STALL

NOT TO SCALE

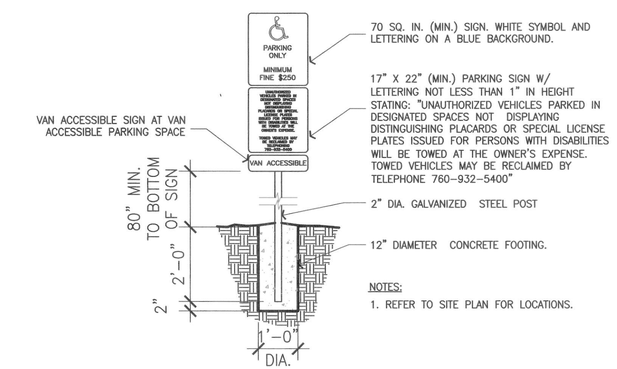

NOTES:

1. REFER TO SITE PLAN FOR LOCATIONS.

ACCESSIBLE STALL SIGNAGE

NOT TO SCALE

IDENTIFICATION STAMP
DIV. OF THE STATE ARCHITECT
02 112592
AC FLS SG
DATE 10/22/12

triad/holmes assoc
civil engineering
land surveying

MAMMOTH LAKES
BISHOP
REDWOOD CITY
SAN LUIS OBISPO

post office box 1570
548 old mammoth rd. ste. 202
MAMMOTH LAKES, ca 93546
phone (760) 934-7588
fax (760) 934-5619
e-mail triad@tholinc.com

873 north main st. suite 150
BISHOP, ca 93514
phone (760) 873-4273
fax (760) 873-8024
e-mail bishop@tholinc.com

777 woodside rd. suite a
REDWOOD CITY, ca 94061
phone (650) 366-4216
fax (650) 366-0288
e-mail sf@tholinc.com

555 chorro st. suite a
SAN LUIS OBISPO, ca 93405
phone (805) 544-8908
fax (805) 544-8932
e-mail slo@tholinc.com

Copyright (C) 2012 by Triad/Holmes Associates.

All Rights Reserved. This Document is Intended Only for Use on the Project Specified in the Title Block. Any Reproduction of this Document or Portions of this Document, Without the Expressed Written Consent of Triad/Holmes is Prohibited.

PREPARED & SUBMITTED BY:

REGISTERED PROFESSIONAL ENGINEER
MATTHEW S. SCHOEN
NO. C 70489
EXP. 9/30/14
CIVIL
STATE OF CALIFORNIA

DATE: 09/06/2012

LEE VINING
STREETS REHABILITATION PROJECT
SECTIONS

DATE	09/06/2012
SCALE	AS SHOWN
DRAWN	MS/SF/JSP
JOB NO.	01.2951.2
SHEET	5 OF 34 SHEETS

K:\01 Mammoth\2951.2\ACAD\Improvement Plans\2951.2 _Title-Index-Notes.dwg Sep 27,2012 - 10:58am, sfoller

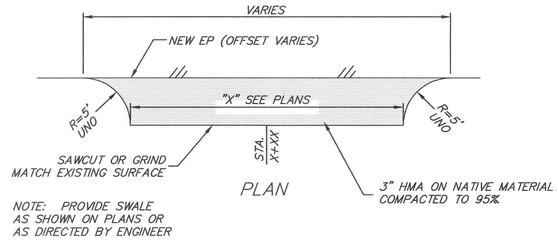

AC APRON DETAIL

NOT TO SCALE

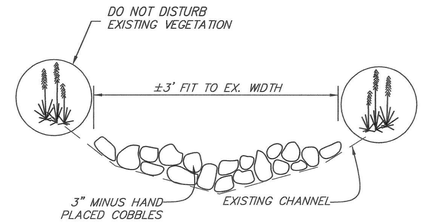

COBBLE SWALE DETAIL

NOT TO SCALE

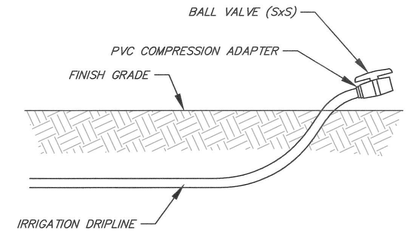

DRIP FLUSH VALVE ASSEMBLY

NOT TO SCALE

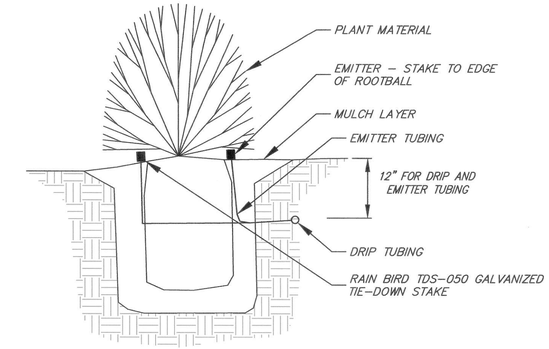

SECTION

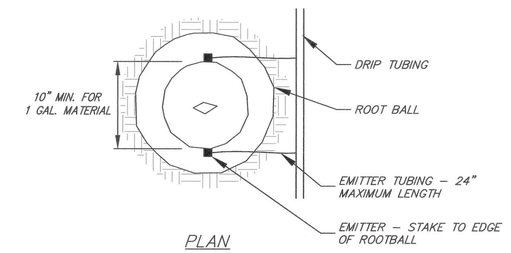

PLAN

NOTE:

1. INSTALL EMITTERS ON OPPOSITE SIDES OF ROOTBALL. EMITTERS ARE TO BE INSTALLED TO CLEAR SURFACE BY A MINIMUM OF 1" AND A MAXIMUM OF 2". DETAIL REPRESENTS TYPICAL INSTALLATION. INSTALL PRESSURE COMPENSATING DRIP EMITTERS TO SHRUBS PER THE FOLLOWING SCHEDULE.

1 GAL. VINE	2 EMITTERS	0.5 GPH
5 GAL. VINE	2 EMITTERS	0.5 GPH

DRIP FOR VINES

NOT TO SCALE

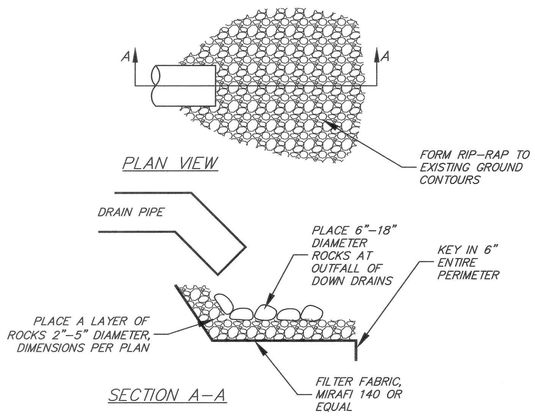

COBBLE-LINED DISSIPATOR

NOT TO SCALE

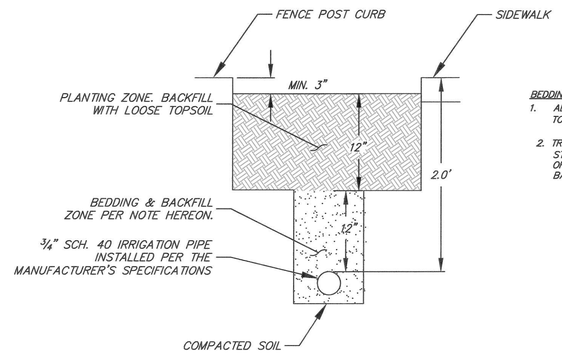

BEDDING & BACKFILL NOTE:

1. ALL BEDDING & BACKFILL SHALL BE COMPACTED TO MIN. 90% OF MATERIAL'S MAX. DRY DENSITY.
2. TRENCH BACKFILL MATERIALS WILL BE FREE OF STONES EXCEEDING 3" IN GREATEST DIMENSION, OR ORGANIC OR OTHER UNSATISFACTORY MATERIAL. BACKFILL MAY BE EXCAVATED TRENCH MATERIAL.

IRRIGATION PIPE TRENCH DETAIL

NOT TO SCALE

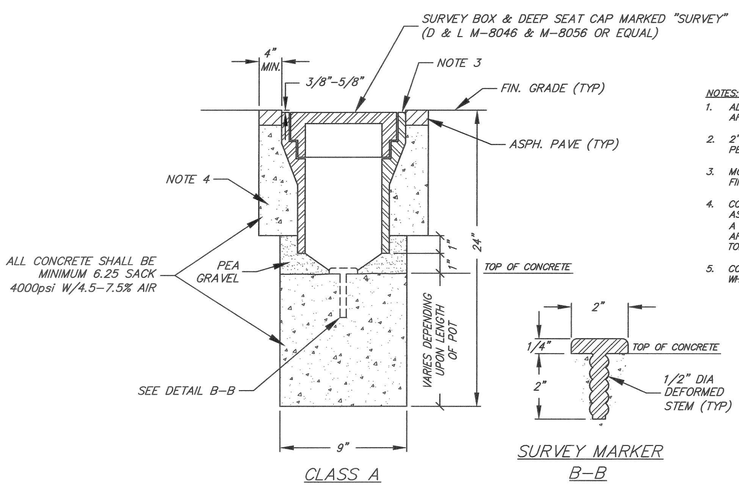

NOTES:

1. ALL SURVEY MARKERS SHALL BE CENTER PUNCHED AFTER PLACEMENT.
2. 2" DIA. ALUMINUM OR BRASS CAP W/PLS # PERMANENTLY ATTACHED PRIOR TO PLACEMENT.
3. MONUMENT POT SHALL BE SET 3/8"-5/8" BELOW FINISHED ROADWAY SURFACE.
4. CONCRETE COLLAR SHALL BE LEFT 2" BELOW FINISHED ASPHALT SURFACE. TOP OF CONCRETE SHALL RECEIVE A ROUGH BROOM FINISH. PLACE 2" OF TYPE 3 HMAC AROUND MONUMENT POT. APPLY SS-1 TACK COAT TO TOP OF CONCRETE BEFORE PLACING ASPHALT PAVING.
5. CONCRETE SHALL BE FLUSH W/TOP OF SURVEY POT WHEN NOT LOCATED IN HMAC PAVING.

SURVEY MONUMENT

NOT TO SCALE

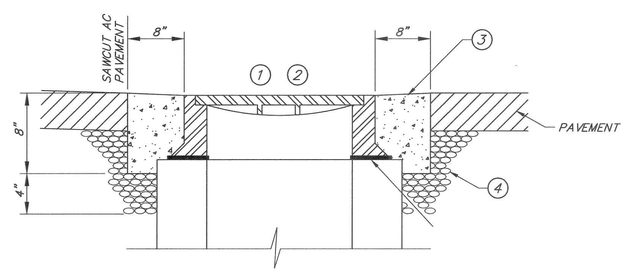

ELEVATION

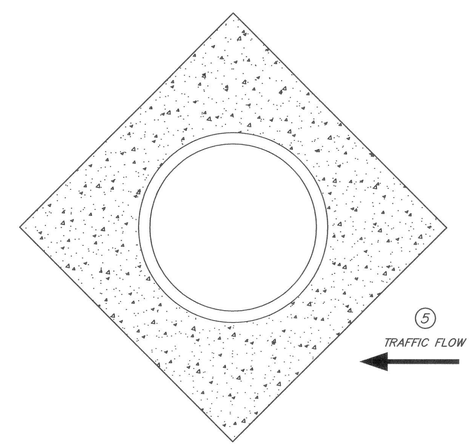

PLAN

NOTES:

1. GRADE OF FRAME AND COVER TO MATCH PAVEMENT GRADE.
2. DEPRESS FRAME AND COVER 1/4" BELOW PAVEMENT.
3. CLASS 1 CONCRETE COLLAR.
4. AGGREGATE BASE.
5. PLACE CONCRETE SUCH THAT NO EDGES ARE PERPENDICULAR TO THE DIRECTION OF THE TRAFFIC FLOW.

IDENTIFICATION STAMP
DIV. OF THE STATE ARCHITECT
02 112592
AC FLS SS
DATE 10/22/12

UTILITY CONCRETE COLLAR DETAIL

NOT TO SCALE

triad/holmes assoc.
civil engineering
land surveying

MAMMOTH LAKES
BISHOP
REDWOOD CITY
SAN LUIS OBISPO

post office box 1570
549 old mammoth rd., ste. 202
MAMMOTH LAKES, ca 93546
phone (760) 934-7588
fax (760) 934-5619
e-mail triad@thdinc.com

873 north main st. suite 150
BISHOP, ca 93514
phone (760) 873-8272
fax (760) 873-8024
e-mail bishop@thdinc.com

777 woodside rd. suite a
REDWOOD CITY, ca 94061
phone (650) 366-0218
fax (650) 366-0298
e-mail sf@thdinc.com

555 chorro st. suite a
SAN LUIS OBISPO, ca 93405
phone (805) 544-8932
fax (805) 544-8932
e-mail slo@thdinc.com

Copyright (C) 2012 by Triad/Holmes Associates.

All Rights Reserved. This Document is Intended Only for Use on the Project Specified in the Title Block. Any Reproduction of this Document or Portions of this Document Without the Express Written Consent of Triad/Holmes is Prohibited.

PREPARED & SUBMITTED BY:

REGISTERED PROFESSIONAL ENGINEER
MATTHEW S. SCHOBER
NO. C 70489
EXP. 9/30/14
CIVIL
STATE OF CALIFORNIA

DATE: 09/06/2012

LEE VINING
STREETS REHABILITATION PROJECT
CONSTRUCTION DETAILS

DATE	09/06/2012
SCALE	AS SHOWN
DRAWN	MS/SF/JSP
JOB NO.	01.2951.2
SHEET	6 OF 34 SHEETS

K:\01 Mammoth\2951.2\ACAD\Improvement Plans\2951.2_Title-Index-Notes.dwg Sep 27,2012 - 11:11am, sfuller

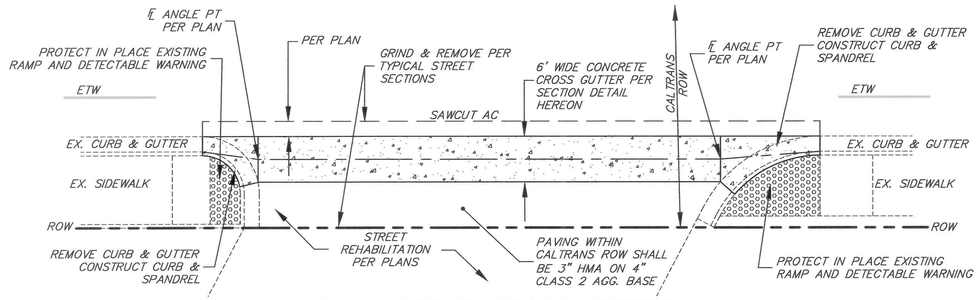

TYPICAL DETAIL CROSS GUTTER IN CALTRANS ROW

NOT TO SCALE

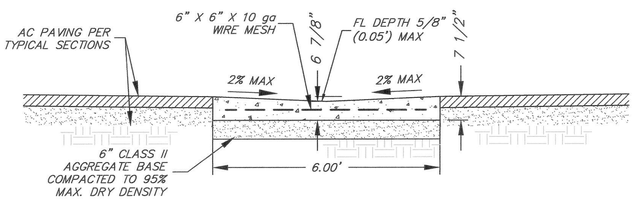

CROSS GUTTER SECTION IN CALTRANS ROW

NOT TO SCALE

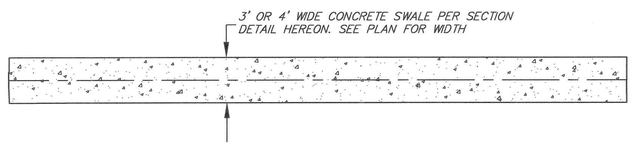

TYPICAL DETAIL CONCRETE SWALE

NOT TO SCALE

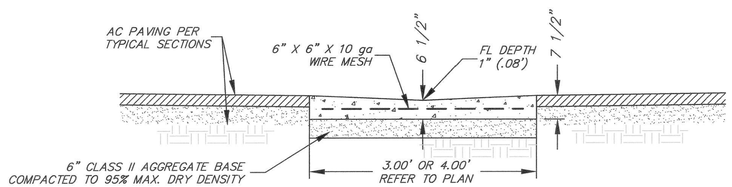

CONCRETE SWALE SECTION

NOT TO SCALE

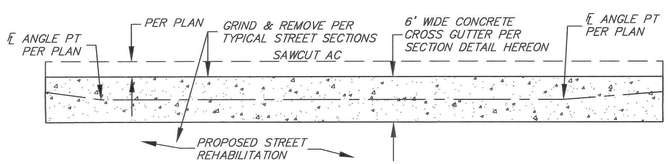

TYPICAL DETAIL CROSS GUTTER IN COUNTY ROW

NOT TO SCALE

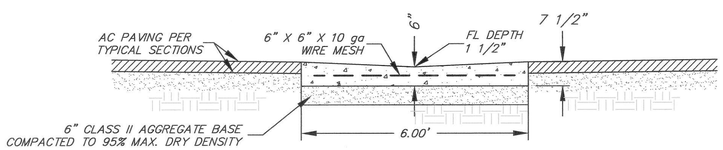

CROSS GUTTER SECTION IN COUNTY ROW

NOT TO SCALE

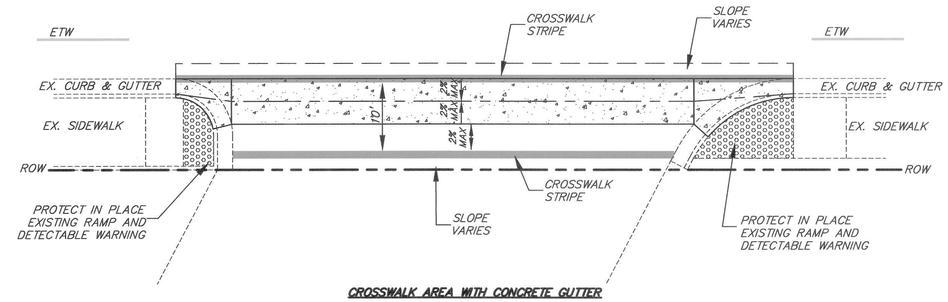

CROSSWALK AREA WITH CONCRETE GUTTER

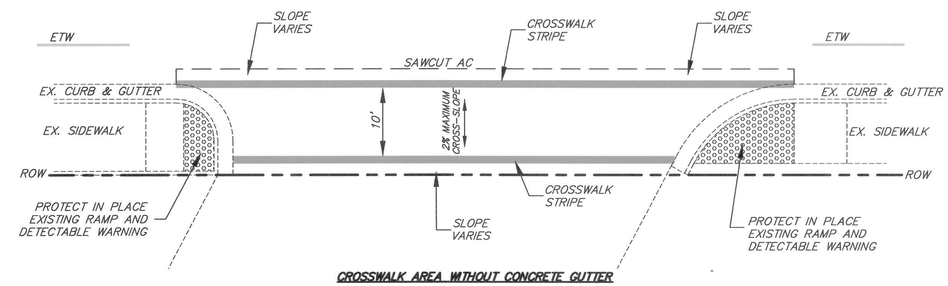

CROSSWALK AREA WITHOUT CONCRETE GUTTER

TYPICAL CROSSWALK AREA DETAIL

NOT TO SCALE

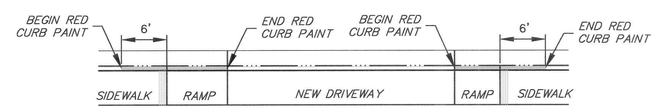

DRIVEWAY

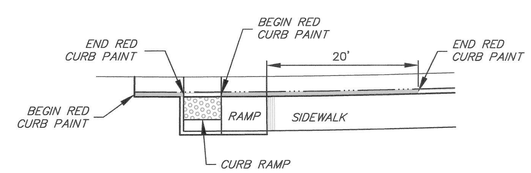

MODIFIED TYPE C CURB RETURN

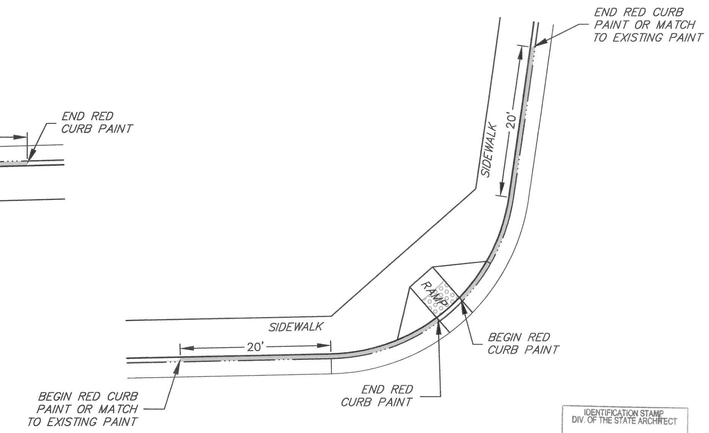

TYPE A CURB RETURN

IDENTIFICATION STAMP
DIV. OF THE STATE ARCHITECT
02 112592
ACCESSORIES — 36 —
DATE 10/22/12

TYPICAL CURB MARKING DETAILS

NOT TO SCALE

triad/holmes assoc.
civil engineering
land surveying

MAMMOTH LAKES
BISHOP
REDWOOD CITY
SAN LUIS OBISPO

post office box 1570
old mammoth rd., ste. 202
MAMMOTH LAKES, ca 93546
phone (760) 934-7588
fax (760) 934-5619
e-mail triad@thalnc.com

873 north main st. suite 150
BISHOP, ca 93514
phone (760) 873-4273
fax (760) 873-8024
e-mail bishop@thalnc.com

777 woodside rd. suite a
REDWOOD CITY, ca 94061
phone (650) 366-0215
fax (650) 368-0295
e-mail sf@thalnc.com

555 chorro st. suite a
SAN LUIS OBISPO, ca 93405
phone (805) 544-8908
fax (805) 544-8932
e-mail slo@thalnc.com

Copyright (C) 2012 by Triad/Holmes Associates.

All Rights Reserved. This Document is Intended Only for Use on the Project Specified in the Title Block. Any Reproduction of this Document or Portions of this Document, Without the Expressed Written Consent of Triad/Holmes is Prohibited.

PREPARED & SUBMITTED BY:

REGISTERED PROFESSIONAL ENGINEER
MATTHEW S. SCHOEDER
NO. C 70489
EXP. 9/30/14
CIVIL
STATE OF CALIFORNIA

DATE: 09/06/2012

LEE VINING STREETS REHABILITATION PROJECT
CONSTRUCTION DETAILS

DATE	09/06/2012
SCALE	AS SHOWN
DRAWN	MS/SF/JSP
JOB NO.	01.2951.2
SHEET	7 OF 34 SHEETS

K:\01 Mammoth\2951.2\ACAD\Improvement Plans\2951.2 _Title-Index-Notes.dwg Sep 27,2012 - 11:12am, sfuller

GENERAL NOTES:

1. ALL CONSTRUCTION AND MATERIALS SHALL CONFORM TO THE PROJECT SPECIFICATIONS, AND PROJECT PLANS AND CONSTRUCTION DETAILS, THE STATE OF CALIFORNIA STANDARD SPECIFICATIONS (CALTRANS 2010) AND SHALL BE SUBJECT TO THE APPROVAL THE ENGINEER. ALL SPECIFICATIONS REFERENCED HEREIN REFER TO THE PROJECT SPECIFICATIONS SECTION UNLESS INDICATED OTHERWISE.

2. ANY SIDEWALK, CURB, GUTTERS OR ANY OTHER CONCRETE STRUCTURES DAMAGED DURING CONSTRUCTION SHALL BE REPLACED BY THE CONTRACTOR AT NO ADDITIONAL COST.

3. UTILITY LOCATIONS SHOWN ON THE DRAWING ARE APPROXIMATE. WHERE EXCAVATION IS NECESSARY, THE CONTRACTOR SHALL CONTACT UNDERGROUND SERVICE ALERT (USA) AND ALL AFFECTED UTILITY COMPANIES TO LOCATE ALL BURIED UTILITIES AT LEAST 48 HOURS TO EXCAVATION. THE CONTRACTOR SHALL COORDINATE WITH UTILITY COMPANIES FOR RELOCATION OF UTILITIES AS REQUIRED BY THE WORK. EXISTING UTILITY TYPE, LOCATION, MATERIAL AND SIZE ARE BASED ON A SEARCH OF EXISTING RECORDS. WHENEVER A CONNECTION TO OR CLEARANCE FROM AN EXISTING UTILITY IS REQUIRED, THE CONTRACTOR SHALL POTHOLE TO VERIFY THE LOCATION, SIZE AND MATERIAL OF THE UTILITY PRIOR TO CONSTRUCTION.

4. THE CONTRACTOR SHALL BE RESPONSIBLE FOR ANY DAMAGES TO EXISTING ROADS, BUILDING OR OTHER STRUCTURES RESULTING FROM HIS CONSTRUCTION ACTIVITIES. REPAIRS SHALL BE MADE TO THE SATISFACTION OF THE ENGINEER AT NO COST TO THE OWNER.

5. THE CONTRACTOR SHALL IMMEDIATELY NOTIFY THE ENGINEER OF DISCREPANCIES BETWEEN THE INFORMATION SHOWN ON THESE DRAWINGS AND THE CONDITIONS EXISTING IN THE FIELD. THE CONTRACTOR SHALL COMPARE ALL DRAWINGS AND VERIFY THE FIGURES BEFORE LAYING OUT THE WORK AND WILL BE RESPONSIBLE FOR ANY ERRORS WHICH MIGHT HAVE BEEN AVOIDED THEREBY. IF THE CONTRACTOR FAILS TO NOTIFY THE ENGINEER IN A TIMELY MANOR OF ANY APPARENT ERROR OR OMISSION ON THE PLANS OR SPECIFICATIONS, THE CONTRACTOR SHALL BE RESPONSIBLE FOR CORRECTING WORK INCORRECTLY DONE AT THE CONTRACTOR'S OWN EXPENSE.

6. PAYMENT FOR WORK SHOWN ON THESE PLANS EITHER SPECIFIED OR INFERRED, BUT NOT IN THE BID PROPOSAL SHALL BE CONSIDERED AS INCLUDED IN THE PRICE PAID FOR OTHER ITEMS OF WORK.

7. THE CONTRACTOR SHALL BE RESPONSIBLE FOR ENSURING THAT ALL MANHOLE RIMS AND ANY EXISTING UTILITY COVERS WITHIN THE CONSTRUCTION LIMITS ARE SET TO THE FINISH GRADE ACCORDING TO THE DETAILS.

8. THE CONTRACTOR SHALL BE RESPONSIBLE FOR OBTAINING CONSTRUCTION WATER FOR HIS NEEDS, AS WELL AS STAGING AREA LOCATIONS.

9. DURING THE ENTIRE DURATION OF THIS CONSTRUCTION CONTRACT, THE CONTRACTOR SHALL IMPLEMENT STRINGENT DUST CONTROL MEASURES IN ACCORDANCE WITH THE STATE OF CALIFORNIA RULES AND REGULATIONS. THE CONTRACTOR IS REQUIRED TO SUPPRESS DUST AT ALL TIMES, 24 HOURS A DAY, REGARDLESS OF WHEN CONSTRUCTION ACTIVITIES ARE OCCURRING.

10. CONSTRUCTION TRAFFIC CONTROL SHALL CONFORM TO THE CURRENT EDITION OF THE CALIFORNIA MUTCD.

11. BASE TOPOGRAPHIC SURVEY MAPPING PROVIDED BY TRIAD/HOLMES ASSOCIATES DATED NOVEMBER 2011, HORIZONTAL CONTROL: NAD83, CALIFORNIA STATE PLANE ZONE 3. VERTICAL CONTROL: NAVD 88.

12. RIGHT OF WAY INFORMATION IS BASED ON RECORD DOCUMENTS AND WAS NOT FIELD VERIFIED.

13. CONTRACTOR SHALL PROTECT EXISTING SIGNS, MARKERS AND DELINEATORS AS WELL AS NON-STREET FACILITIES SUCH AS MAILBOXES AND FENCES. SUCH ITEMS SHALL BE REMOVED AND RESET TO ORIGINAL CONDITION IF REQUIRED TO FACILITATE CONSTRUCTION.

TRAFFIC NOTES:

1. REFERENCE SECTION "MAINTAINING TRAFFIC/TRAFFIC CONTROL" OF THE TECHNICAL SPECIFICATIONS.

2. THE CONTRACTOR SHALL SUBMIT TO THE ENGINEER A DETAILED TRAFFIC CONTROL PLAN, PREPARED BY PROFESSIONAL TRAFFIC OPERATIONS ENGINEER (PTOE) OR A TRAFFIC CONTROL SUPERVISOR (TCS) CERTIFIED BY THE AMERICAN TRAFFIC SAFETY SERVICES ASSOCIATION (ATSSA), CONFORMING TO THE LATEST EDITION OF THE MANUAL ON UNIFORM TRAFFIC CONTROL DEVICES.

3. THE CONTRACTOR SHALL MAINTAIN ONE ELEVEN (11) FOOT LANE. AT INTERSECTIONS, MAINTAIN ONE THRU LANE AT ALL TIMES. ONLY ONE SIDE OF AN INTERSECTION MAY BE CLOSED AT ANY ONE TIME.

4. THE CONTRACTOR SHALL INSTALL AND MAINTAIN NECESSARY TEMPORARY PEDESTRIAN & SAFETY CONTROL DEVICES.

5. THE CONTRACTOR SHALL PROVIDE TEMPORARY HOT/COLD MIX (OR AC GRINDINGS WHERE APPROVED BY THE ENGINEER) RAMPS AT DRIVEWAYS, ALLEYS, INTERSECTIONS AND AT THE BEGINNING AND ENDING OF GRADE DROP-OFFS WITHIN THE TRAVEL LANE. RAMPS SHALL BE SUFFICIENTLY SLOPED TO ELIMINATE HAZARDOUS DRIVING CONDITIONS AND SHALL BE NO STEEPER THAN 5%. (NO DIRECT PAYMENT)

6. THE CONTRACTOR SHALL CONSTRUCT SAFETY SLOPES WHERE PUBLIC TRAFFIC IS EXPOSED TO DROP-OFFS GREATER THAN 1.8 INCHES DURING NON-WORKING HOURS. PORTABLE DELINEATORS SHALL BE PLACED AT ALL DROP-OFF LOCATIONS AND BARRIER RAILS (K-RAILS) SHALL BE PLACED WHERE DROP-OFFS EXCEED 18 INCHES. (NO DIRECT PAYMENT)

triad/holmes assoc.
civil engineering
land surveying

MAMMOTH LAKES
BISHOP
REDWOOD CITY
SAN LUIS OBISPO

post office box 1570
548 old mammoth rd., ste. 202
MAMMOTH LAKES, ca 93546
phone (760) 934-7588
fax (760) 934-5819
e-mail triad@thainc.com

873 north main st. suite 150
BISHOP, ca 93514
phone (760) 873-4273
fax (760) 873-8024
e-mail bishop@thainc.com

777 woodside rd. suite a
REDWOOD CITY, ca 94061
phone (650) 366-0216
fax (650) 366-0298
e-mail sf@thainc.com

555 chorro st. suite a
SAN LUIS OBISPO, ca 93405
phone (805) 544-8908
fax (805) 544-8932
e-mail slo@thainc.com

Copyright (C) 2012 by Triad/Holmes Associates.

All Rights Reserved. This Document is Intended Only for Use on the Project Specified in the Title Block. Any Reproduction of this Document or Portions of this Document, Without the Expressed Written Consent of Triad/Holmes is Prohibited.

PREPARED & SUBMITTED BY:

REGISTERED PROFESSIONAL ENGINEER
MATTHEW S. SCHOEBER
No. C 70489
Exp. 9/30/14
CIVIL
STATE OF CALIFORNIA

DATE: 09/06/2012

LEE VINING
STREETS REHABILITATION PROJECT

NOTES

DATE	09/06/2012
SCALE	AS SHOWN
DRAWN	MS/SF/JSP
JOB NO.	01.2951.2
SHEET	8 OF 34 SHEETS

K:\01 Mammoth\2951.2\ACAD\Improvement Plans\2951.2 _Title-Index-Notes.dwg Feb 21,2013 - 1:55pm, mschober

Storm Drain

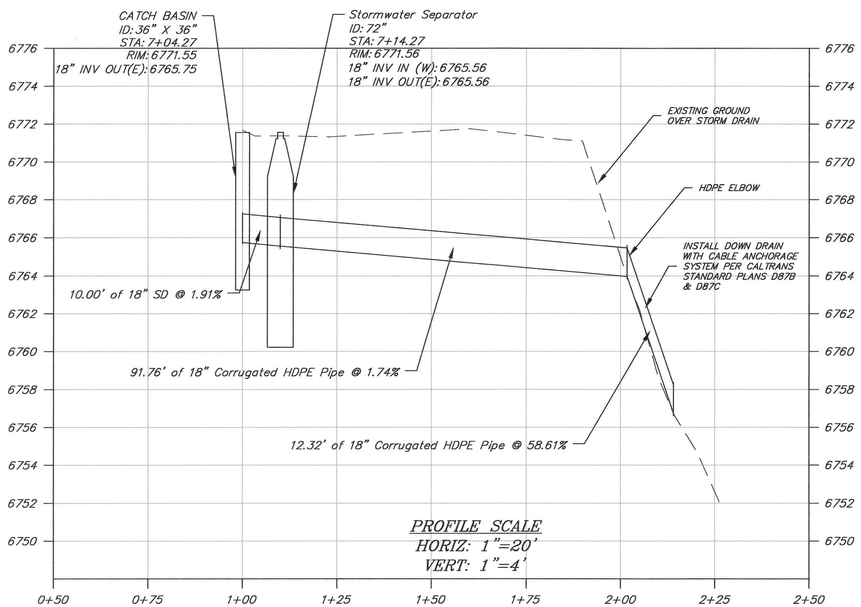

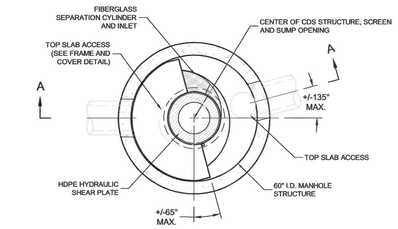

CDS2015 RATED TREATMENT CAPACITY IS 0.7 CFS, OR PER LOCAL REGULATIONS. MAXIMUM HYDRAULIC INTERNAL BYPASS CAPACITY IS 14.0 CFS. IF THE SITE CONDITIONS EXCEED 14.0 CFS, AN UPSTREAM BYPASS STRUCTURE IS REQUIRED.

THE STANDARD CDS2015 CONFIGURATION IS SHOWN. ALTERNATE CONFIGURATIONS ARE AVAILABLE AND ARE LISTED BELOW. SOME CONFIGURATIONS MAY BE COMBINED TO SUIT SITE REQUIREMENTS.

DESIGNATION (MODEL SUFFIX)	CONFIGURATION DESCRIPTION
G	GRATED INLET ONLY (NO INLET PIPE)
GP	GRATED INLET WITH INLET PIPE OR PIPES
K	CURB INLET ONLY (NO INLET PIPE)
KP	CURB INLET WITH INLET PIPE OR PIPES
B	SEPARATE OIL BAFFLE (SINGLE INLET PIPE REQUIRED FOR THIS CONFIGURATION)
W	SEDIMENT WEIR FOR NJDEP / NJCAT CONFORMING UNITS

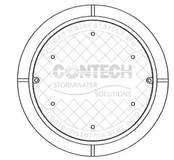

SITE SPECIFIC DATA REQUIREMENTS

STRUCTURE ID			
WATER QUALITY FLOW RATE (CFS)			0.3
PEAK FLOW RATE (CFS)			2.4
RETURN PERIOD OF PEAK FLOW (YRS)			25
SCREEN APERTURE (2400 OR 4700)			*
PIPE DATA:	I.E.	MATERIAL	DIAMETER
INLET PIPE 1	*	*	*
INLET PIPE 2	*	*	*
OUTLET PIPE	*	*	*
RIM ELEVATION			*
ANTI-FLOTATION BALLAST	WIDTH	HEIGHT	
	*	*	
NOTES/SPECIAL REQUIREMENTS:			
* PER ENGINEER OF RECORD			

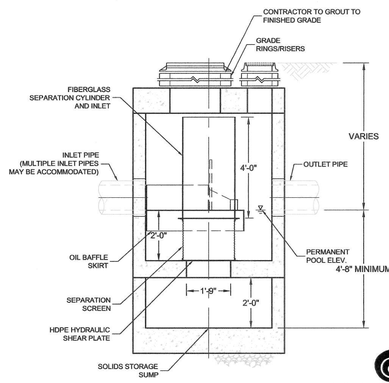

GENERAL NOTES

1. CONTECH TO PROVIDE ALL MATERIALS UNLESS NOTED OTHERWISE.
2. DIMENSIONS MARKED WITH ( ) ARE REFERENCE DIMENSIONS. ACTUAL DIMENSIONS MAY VARY.
3. FOR FABRICATION DRAWINGS WITH DETAILED STRUCTURE DIMENSIONS AND WEIGHTS, PLEASE CONTACT YOUR CONTECH STORMWATER SOLUTIONS REPRESENTATIVE. www.contechstormwater.com
4. CDS WATER QUALITY STRUCTURE SHALL BE IN ACCORDANCE WITH ALL DESIGN DATA AND INFORMATION CONTAINED IN THIS DRAWING.
5. STRUCTURE AND CASTINGS SHALL MEET AASHTO HS20 LOAD RATING.
6. HDPE HYDRAULIC SHEAR PLATE IS PLACED ON SHELF AT BOTTOM OF SCREEN CYLINDER. REMOVE AND REPLACE AS NECESSARY DURING MAINTENANCE CLEANING.

INSTALLATION NOTES

1. ANY SUB-BASE, BACKFILL DEPTH, AND/OR ANTI-FLOTATION PROVISIONS ARE SITE-SPECIFIC DESIGN CONSIDERATIONS AND SHALL BE SPECIFIED BY ENGINEER OF RECORD.
2. CONTRACTOR TO PROVIDE EQUIPMENT WITH SUFFICIENT LIFTING AND REACH CAPACITY TO LIFT AND SET THE CDS MANHOLE STRUCTURE (LIFTING CLUTCHES PROVIDED).
3. CONTRACTOR TO ADD JOINT SEALANT BETWEEN ALL STRUCTURE SECTIONS, AND ASSEMBLE STRUCTURE.
4. CONTRACTOR TO PROVIDE, INSTALL, AND GROUT PIPES. MATCH PIPE INVERTS WITH ELEVATIONS SHOWN.
5. CONTRACTOR TO TAKE APPROPRIATE MEASURES TO ASSURE UNIT IS WATER TIGHT, HOLDING WATER TO FLOWLINE INVERT MINIMUM. IT IS SUGGESTED THAT ALL JOINTS BELOW PIPE INVERTS ARE GROUTED.

CDS®

THIS PRODUCT MAY BE PROTECTED BY ONE OR MORE OF THE FOLLOWING U.S. PATENTS: 5,198,085; 5,641,230; 5,511,365; 6,361,693, AND/OR FOREIGN PATENTS, OR OTHER PATENTS PENDING.

CONTECH STORMWATER SOLUTIONS
contechstormwater.com

CDS2015
PRECAST CONCRETE WATER QUALITY SYSTEM
STANDARD DETAIL

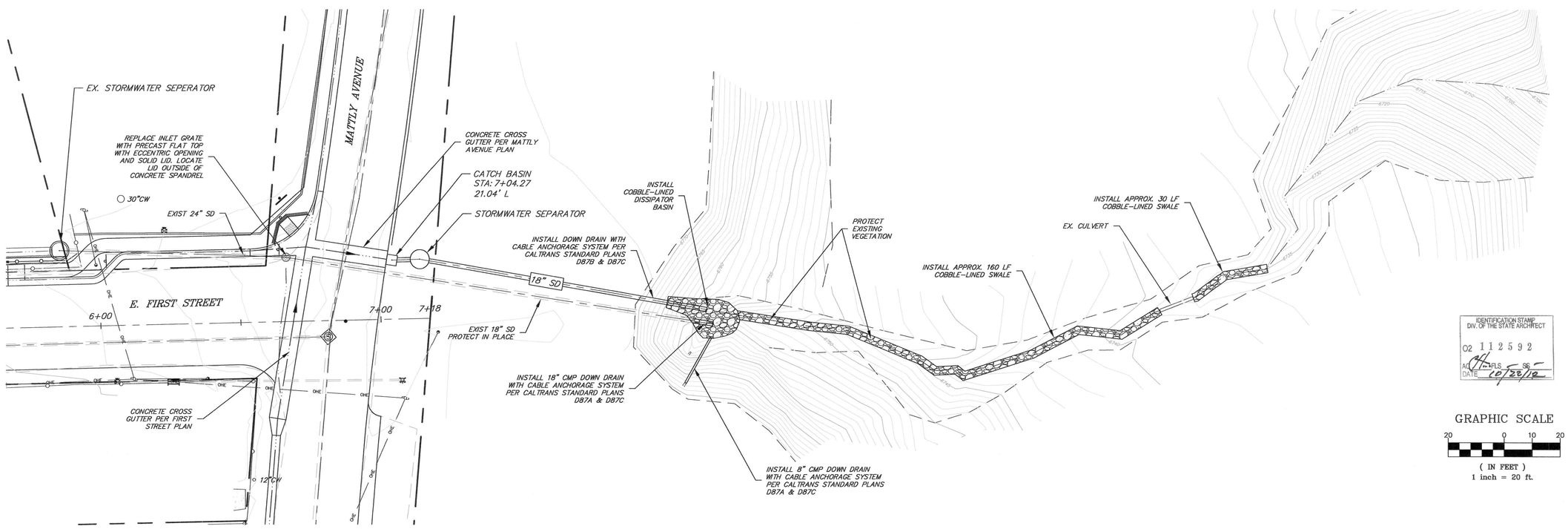

IDENTIFICATION STAMP
DIV. OF THE STATE ARCHITECT
02 112592
ACCT. PRS. SS
DATE 10/23/12

GRAPHIC SCALE

20 0 10 20

(IN FEET)
1 inch = 20 ft.

triad/holmes assoc.
civil engineering
land surveying

MAMMOTH LAKES
BISHOP
REDWOOD CITY
SAN LUIS OBISPO

post office box 1570
549 old mammoth rd., ste. 302
MAMMOTH LAKES, ca 93546
phone (760) 934-7588
fax (760) 934-5619
e-mail triad@thdinc.com

873 north main st. suite 150
BISHOP, ca 93514
phone (760) 873-4273
fax (760) 873-8024
e-mail bishop@thdinc.com

777 woodside rd. suite a
REDWOOD CITY, ca 94061
phone (650) 368-5218
fax (650) 368-0298
e-mail sf@thdinc.com

555 chorro st. suite a
SAN LUIS OBISPO, ca 93405
phone (805) 544-8908
fax (805) 544-8932
e-mail slo@thdinc.com

Copyright (C) 2012 by Triad/Holmes Associates.

All Rights Reserved. This Document is Instrument of Service For Use on the Project Specified in the Title Block. Any Reproduction of this Document or Portions of this Document, Without the Expressed Written Consent of Triad/Holmes is Prohibited.

PREPARED & SUBMITTED BY:

REGISTERED PROFESSIONAL ENGINEER
MATTHEW S. SCHOBER
No. C 70489
Exp. 6/30/14
CIVIL
STATE OF CALIFORNIA

DATE: 09/06/2012

LEE VINING
STREETS REHABILITATION PROJECT
STORM DRAIN IMPROVEMENTS

DATE	09/06/2012
SCALE	AS SHOWN
DRAWN	MS/SF/JSP
JOB NO.	01.2951.2
SHEET	9
OF	34 SHEETS

K:\01 Mammoth\2951.2\CAD\Improvement Plans\2951.2 DRAIN.dwg Sep 27,2012 - 11:25am, sfuller

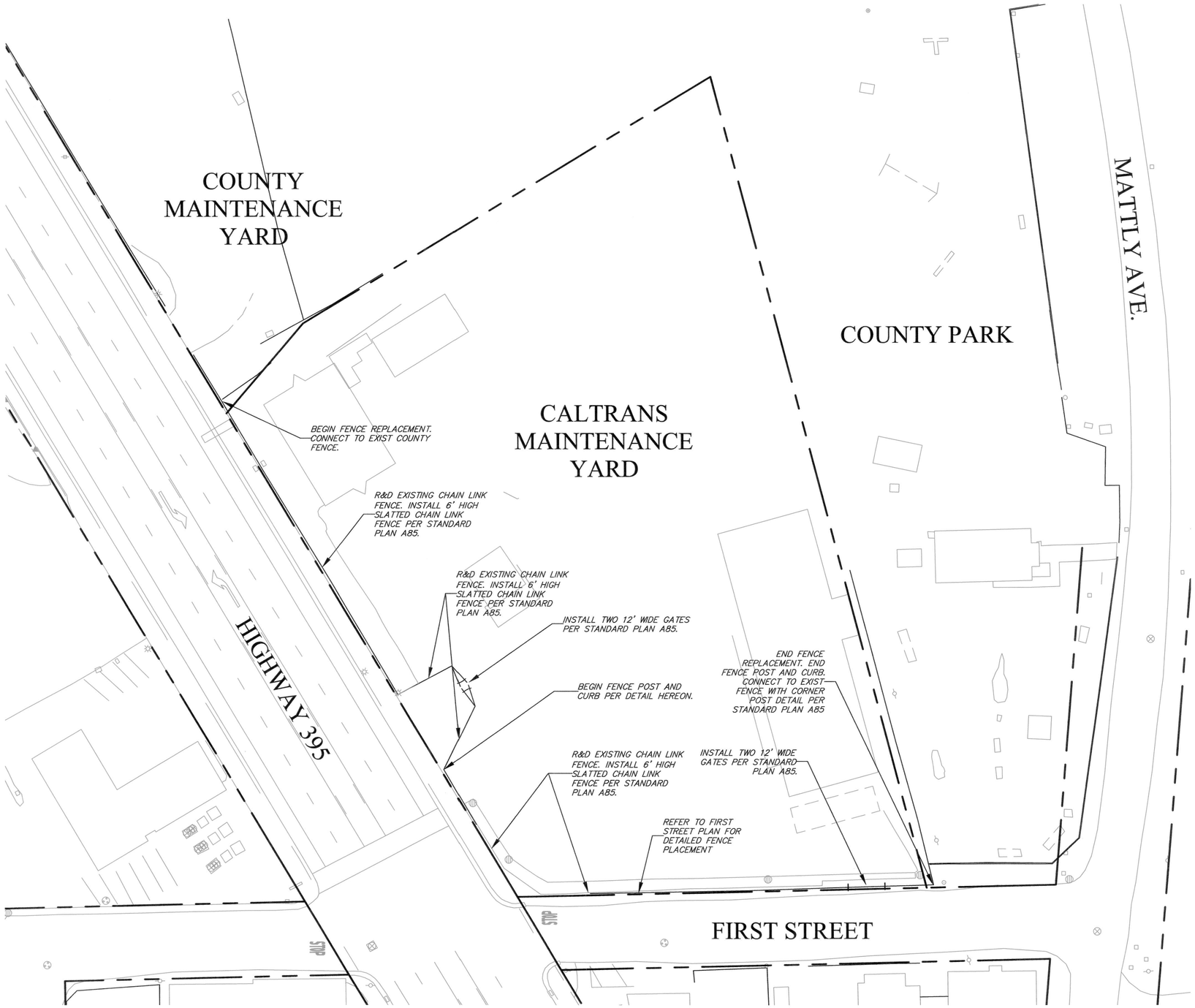

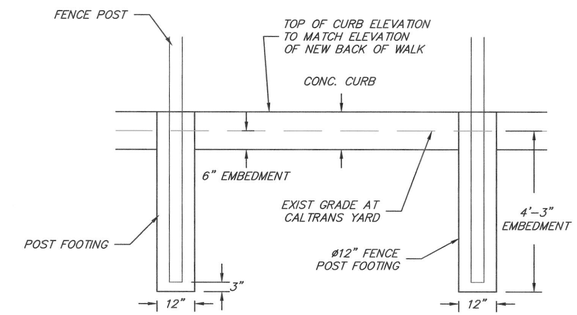

SECTION VIEW

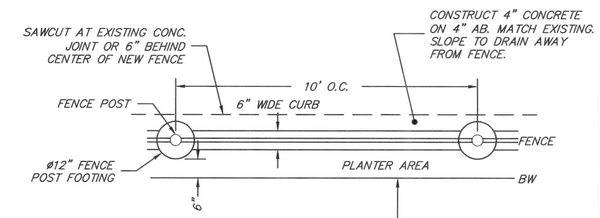

PLAN VIEW

5' SIDEWALK

FENCE POST AND CURB DETAIL

NTS

IDENTIFICATION STAMP
DIV. OF THE STATE ARCHITECT
02 112592
AC FLS SS
DATE 10/22/12

GRAPHIC SCALE

30 0 15 30 60 120

(IN FEET)
1 inch = 30 ft.

triad/holmes assoc.
civil engineering
land surveying

MAMMOTH LAKES
BISHOP
REDWOOD CITY
SAN LUIS OBISPO

post office box 1570
548 old mammoth rd., ste. 202
MAMMOTH LAKES, ca 93546
phone (760) 934-7588
fax (760) 934-5619
e-mail triad@thalnc.com

873 north main st. suite 150
BISHOP, ca 93514
phone (760) 873-4273
fax (760) 873-8024
e-mail bishop@thalnc.com

777 woodside rd. suite a
REDWOOD CITY, ca 94061
phone (650) 366-0216
fax (650) 366-0298
e-mail sf@thalnc.com

555 chorro st. suite a
SAN LUIS OBISPO, ca 93405
phone (805) 544-8908
fax (805) 544-8932
e-mail slo@thalnc.com

Copyright (C) 2012 by Triad/Holmes Associates.

All Rights Reserved. This Document is Intended Only for Use on the Project Specified. Any Reproduction of this Document or Portions of this Document, Without the Expressed Written Consent of Triad/Holmes is Prohibited.

PREPARED & SUBMITTED BY:

REGISTERED PROFESSIONAL ENGINEER
MATTHEW S. SCHOEFER
NO. C 70489
EXP. 9/30/14
CIVIL
STATE OF CALIFORNIA

DATE: 09/06/2012

LEE VINING STREETS REHABILITATION PROJECT

FENCE PLAN

DATE	09/06/2012
SCALE	AS SHOWN
DRAWN	MS/SF/JSP
JOB NO.	01.2951.2
SHEET	10 OF 34 SHEETS

K:\01 Mammoth\2951.2\CAD\Improvement Plans\2951.2 FENCE.dwg Sep 27,2012 - 11:39am, sfuller

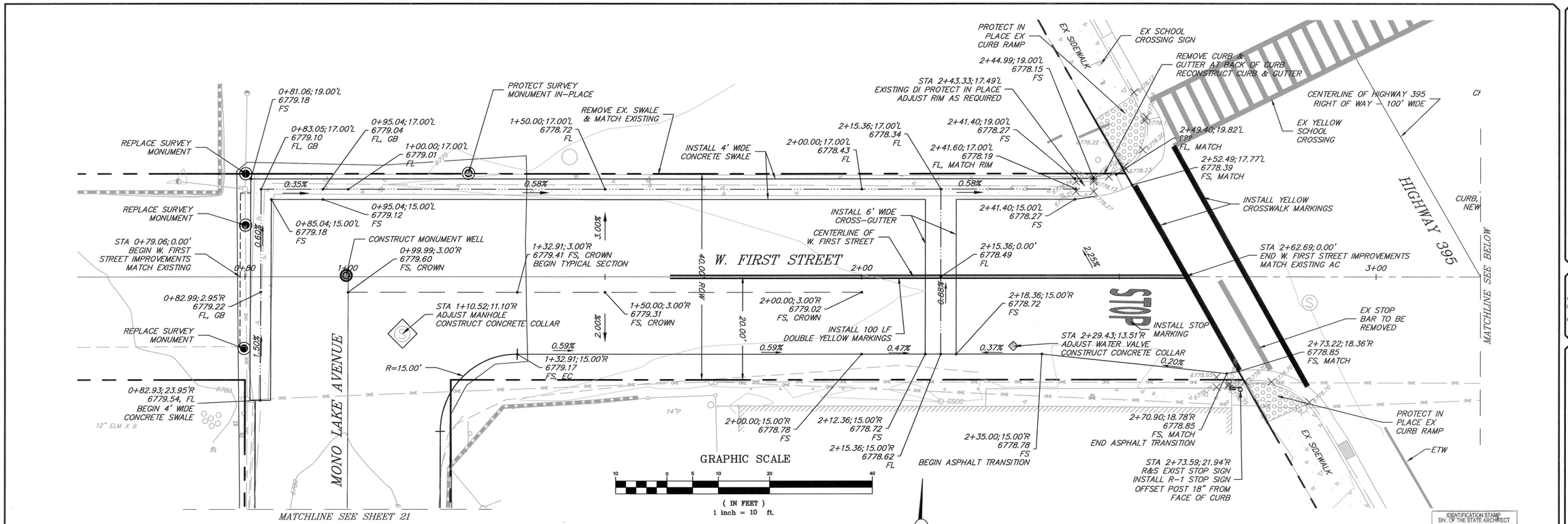

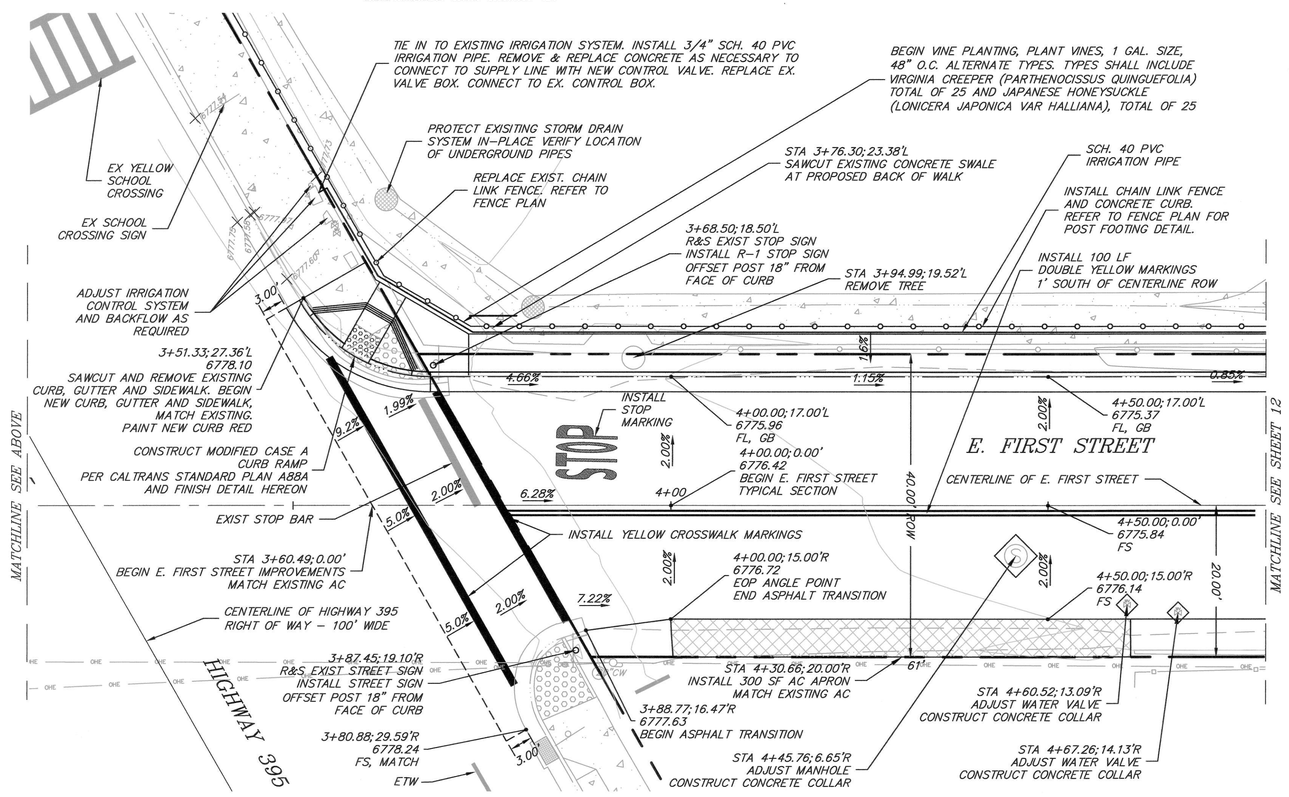

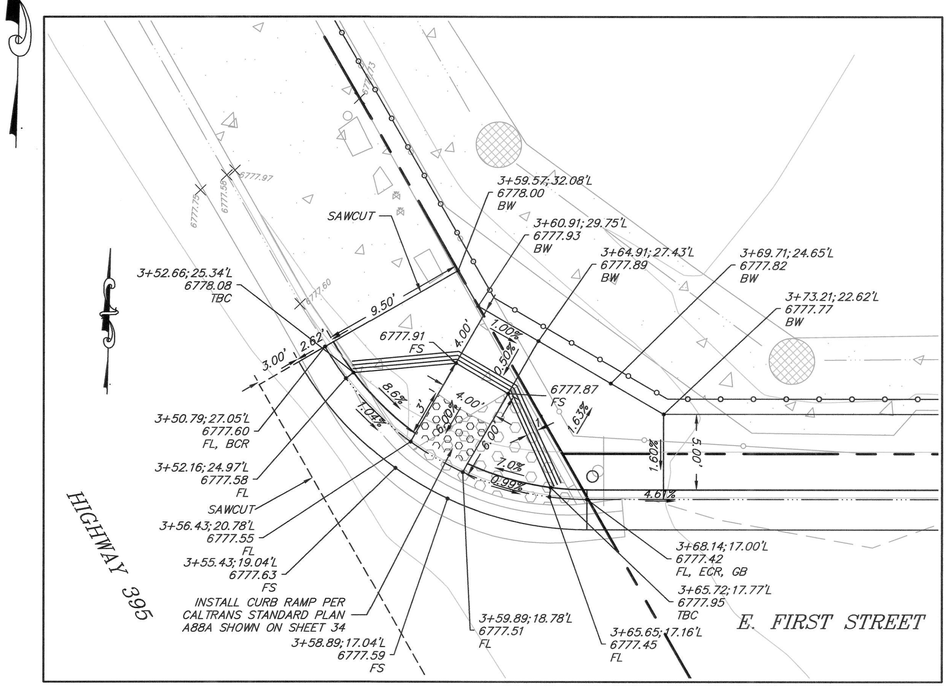

CURB RAMP DETAIL

SCALE 1"=5'

IDENTIFICATION STAMP
DIV. OF THE STATE ARCHITECT
02 112592
AC FLS. SS
DATE 10/22/12

triad/holmes assoc.
civil engineering
land surveying

MAMMOTH LAKES
BISHOP
REDWOOD CITY
SAN LUIS OBISPO

post office box 1570
548 old mammoth rd, ste. 202
MAMMOTH LAKES, ca 93546
phone (760) 934-7588
fax (760) 934-5619
e-mail triad@thalinc.com

873 north main st. suite 150
BISHOP, ca 93514
phone (760) 873-4273
fax (760) 873-8024
e-mail bishop@thalinc.com

777 woodside rd. suite a
REDWOOD CITY, ca 94061
phone (650) 368-6261
fax (650) 368-0238
e-mail sf@thalinc.com

555 chorro st. suite a
SAN LUIS OBISPO, ca 93405
phone (805) 544-8908
fax (805) 544-8932
e-mail slo@thalinc.com

Copyright (C) 2012 by Triad/Holmes Associates.

All Rights Reserved. This Drawing is Prepared Solely for Use on the Project Specified in the Title Block. Any Reproduction of this Document or Portions of this Document, Without the Expressed Written Consent of Triad/Holmes is Prohibited.

PREPARED & SUBMITTED BY:

REGISTERED PROFESSIONAL ENGINEER
MATTHEW S. SCHOBER
NO. C 70489
EXP. 9/30/14
CIVIL
STATE OF CALIFORNIA

DATE: 09/06/2012

LEE VINING STREETS REHABILITATION PROJECT

W. FIRST STREET / E. FIRST STREET

DATE	09/06/2012
SCALE	AS SHOWN
DRAWN	MS/SF/JSP
JOB NO.	01.2951.2
SHEET	11
OF	34 SHEETS

K:\01 Mammoth\2951.2\ACAD\Improvement Plans\2951.2 1ST.dwg Sep 27,2012 - 11:42am, sfuller

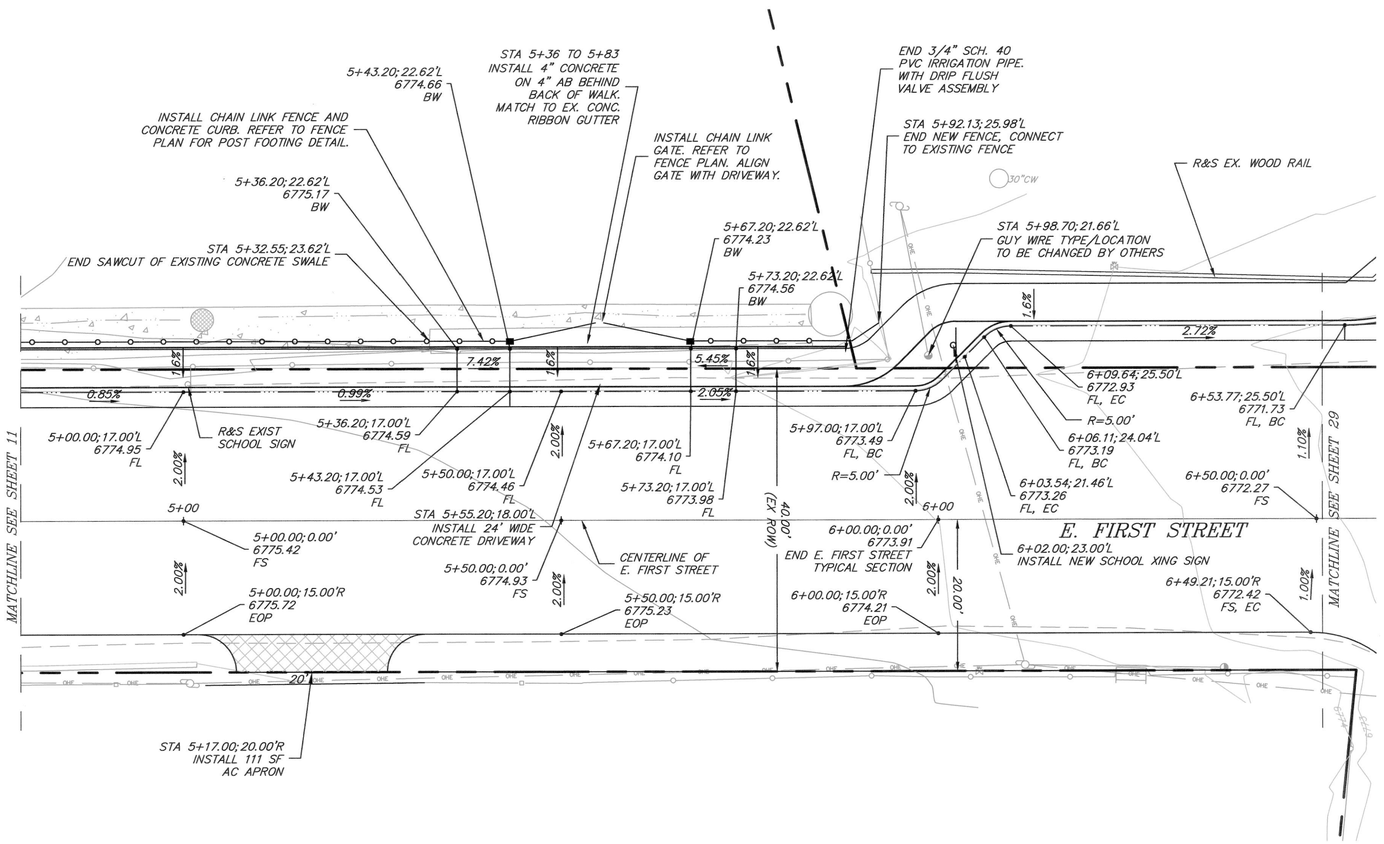

GRAPHIC SCALE

10 0 5 10 20 40

(IN FEET)
1 inch = 10 ft.

IDENTIFICATION STAMP
DIV. OF THE STATE ARCHITECT
02 112592
AC FLS SS
DATE 10/22/12

triad/holmes assoc.
civil engineering
land surveying

MAMMOTH LAKES
BISHOP
REDWOOD CITY
SAN LUIS OBISPO

post office box 1570
548 old mammoth rd., ste. 202
MAMMOTH LAKES, ca 93546
phone (760) 934-7588
fax (760) 934-5619
e-mail triad@thainc.com

873 north main st. suite 150
BISHOP, ca 93514
phone (760) 873-4273
fax (760) 873-8024
e-mail bishop@thainc.com

777 woodside rd. suite a
REDWOOD CITY, ca 94061
phone (650) 366-0218
fax (650) 366-0298
e-mail sf@thainc.com

555 chorro st. suite a
SAN LUIS OBISPO, ca 93405
phone (805) 544-8908
fax (805) 544-8932
e-mail slo@thainc.com

Copyright (C) 2012 by Triad/Holmes Associates.

All Rights Reserved. This Document is Intended Only for Use on the Project Specified in the Title Block. Any Reproduction of this Document or Portions of this Document, Without the Expressed Written Consent of Triad/Holmes is Prohibited.

PREPARED & SUBMITTED BY:

REGISTERED PROFESSIONAL ENGINEER
MATTHEW S. SCHOBER
NO. C 70489
EXP. 9/30/14
CIVIL
STATE OF CALIFORNIA

DATE: 09/06/2012

LEE VINING STREETS REHABILITATION PROJECT

E. FIRST STREET

DATE	09/06/2012
SCALE	AS SHOWN
DRAWN	MS/SF/JSP
JOB NO.	01.2951.2
SHEET	12 OF 34 SHEETS

K:\01 Mammoth\2951.2\ACAD\Improvement Plans\2951.2 1ST.dwg Sep 27,2012 - 11:44am, sfuller